Excellent Integrated System Limited

Stocking Distributor

Click to view price, real time Inventory, Delivery & Lifecycle Information:

Everlight Electronics Co Ltd
28-21SUGC/S400-A4/TR8

For any questions, you can email us directly:
sales@integrated-circuit.com

EVERLIGHT ELECTRONICS CO.,LTD

Technical Data Sheet

1.4 mm Height Subminiature , Axial Flat Top View LED

28-21SUGC/S400-A4/TR8

Features

- Package in 12mm tape on 7" diameter reels.
- Compatible with automatic placement equipment.
- EIA Std. package.
- Mono-color type.
- Pb-free
- The product itself will remain within RoHS compliant version.

Descriptions

- The 28-21 SMD LED is much smaller than leaded components .Thus enable smaller board size. Higher packing density. Reduced storage space and finally smaller equipment to be obtained.
- Besides, light weight makes them ideal for miniature applications.
- Furthermore by automation assembly machines the accuracy is anticipated.

Applications

- Small indicator for indoor applications.
- Flat backlight for LCD, switches and symbols.
- Indicator and backlight in office equipment.
- Indicator and backlight for battery driven equipment.
- Indicator and backlight for audio and video equipment.
- Backlighting in dashboards and switches.
- Telecommunication：indicator and backlighting in telephone and fax.

Device Selection Guide

Part No.	Chip Material	Emitted Color	Resin Color
28-21SUGC/S400-A4/TR8	InGaN	Brilliant Green	Water Clear

EVERLIGHT ELECTRONICS CO.,LTD

28-21SUGC/S400-A4/TR8

Package Outline Dimensions

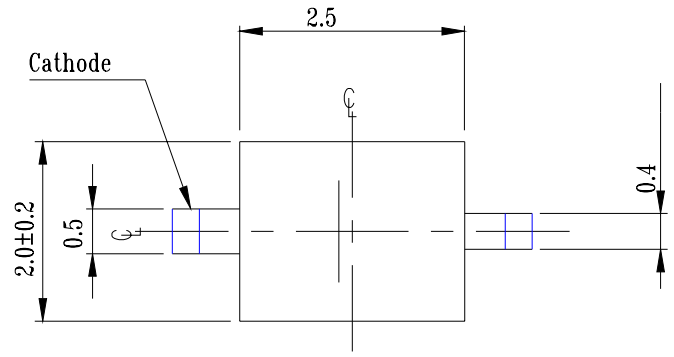

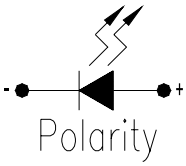

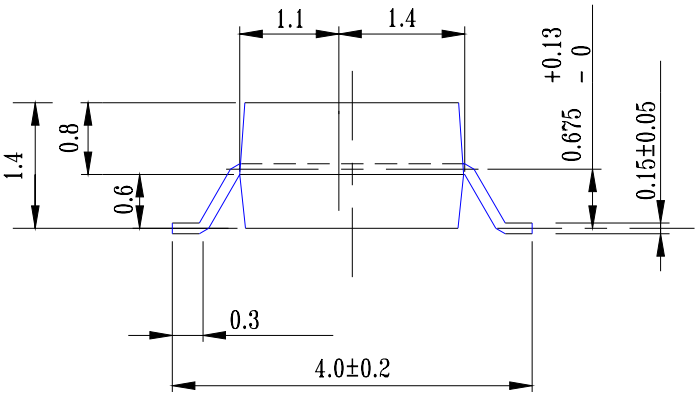

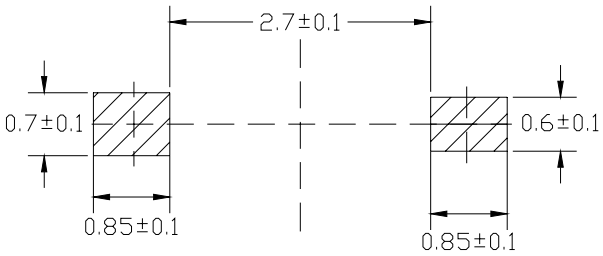

Note: The tolerances unless mentioned are ±0.1, unit=mm.

EVERLIGHT ELECTRONICS CO.,LTD

28-21SUGC/S400-A4/TR8

Absolute Maximum Ratings (Ta=25℃)

Parameter	Symbol	Rating	Unit
Reverse Voltage	V_R	5	V
Forward Current	I_F	25	mA
Peak Forward Current (Duty 1/10 @ 1KHz)	I_{FP}	100	mA
Power Dissipation	Pd	95	mW
Electrostatic Discharge(HBM)	ESD	150	V
Operating Temperature	Topr	-40 ~ +85	℃
Storage Temperature	Tstg	-40 ~ +100	℃
Soldering Temperature	Tsol	Reflow Soldering : 260 ℃ for 10 sec. Hand Soldering : 350 ℃ for 3 sec.	

Electro-Optical Characteristics (Ta=25℃)

Parameter	**Symbol**	**Min.**	**Typ.**	**Max.**	**Unit**	**Condition**
Luminous Intensity	I_V	112	167	----	mcd	I_F=20mA
Viewing Angle	$2\theta 1/2$	----	150	----	deg	
Peak Wavelength	λp	----	518	----	nm	
Dominant Wavelength	λd	----	525	----	nm	
Spectrum Radiation Bandwidth	$\triangle\lambda$	----	35	----	nm	
Forward Voltage	V_F	2.7	3.3	3.7	V	
Reverse Current	I_R	----	----	50	μA	V_R=5V

EVERLIGHT ELECTRONICS CO.,LTD

28-21SUGC/S400-A4/TR8

Typical Electro-Optical Characteristics Curves

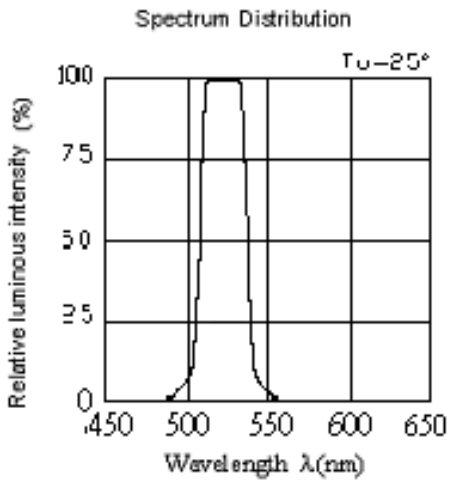

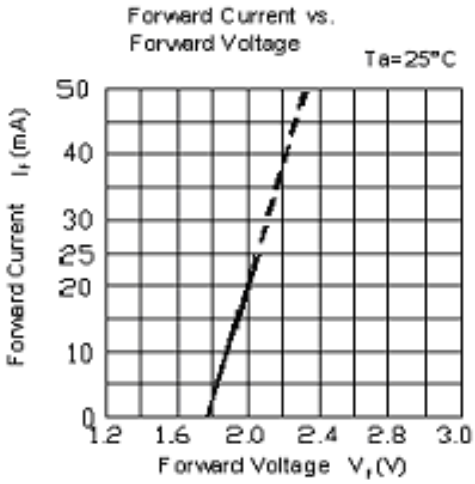

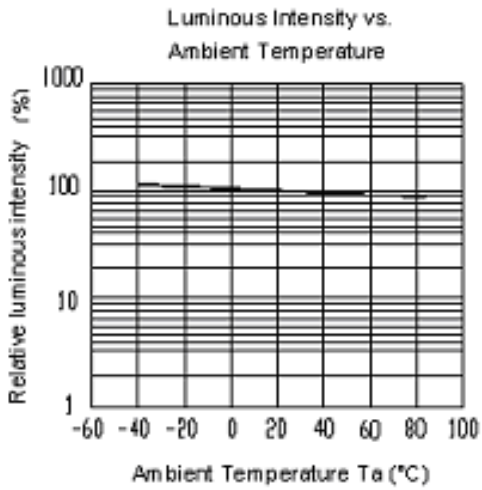

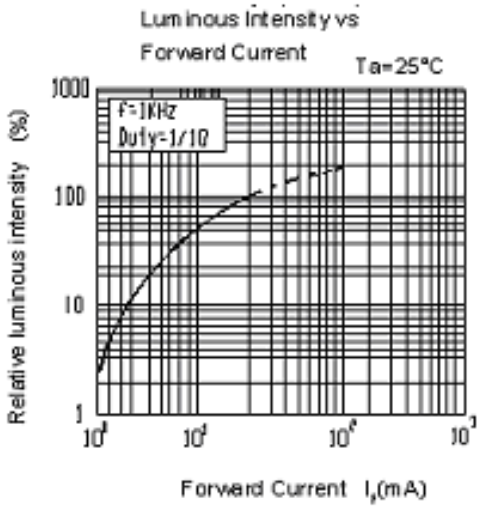

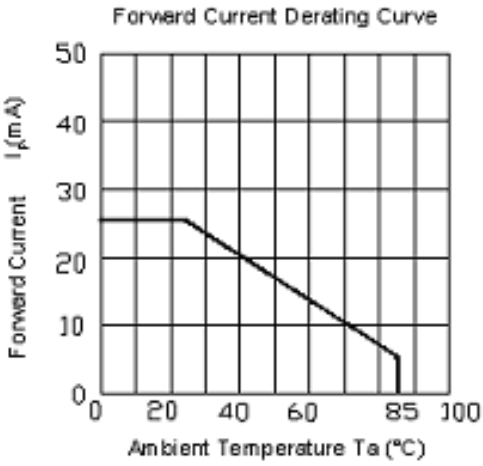

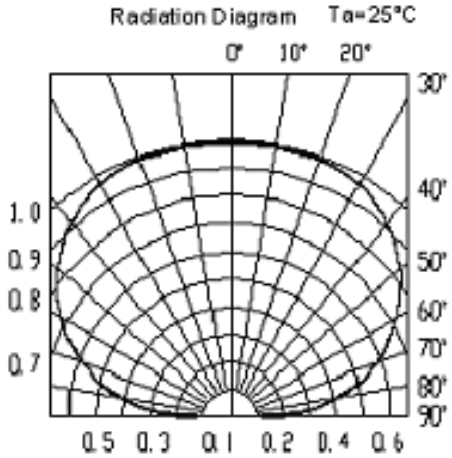

EVERLIGHT ELECTRONICS CO.,LTD

28-21SUGC/S400-A4/TR8

Label explanation

CAT: Luminous Intensity Rank

HUE: Dom. Wavelength Rank

REF: Forward Voltage Rank

Reel & Carrier Tape Dimensions

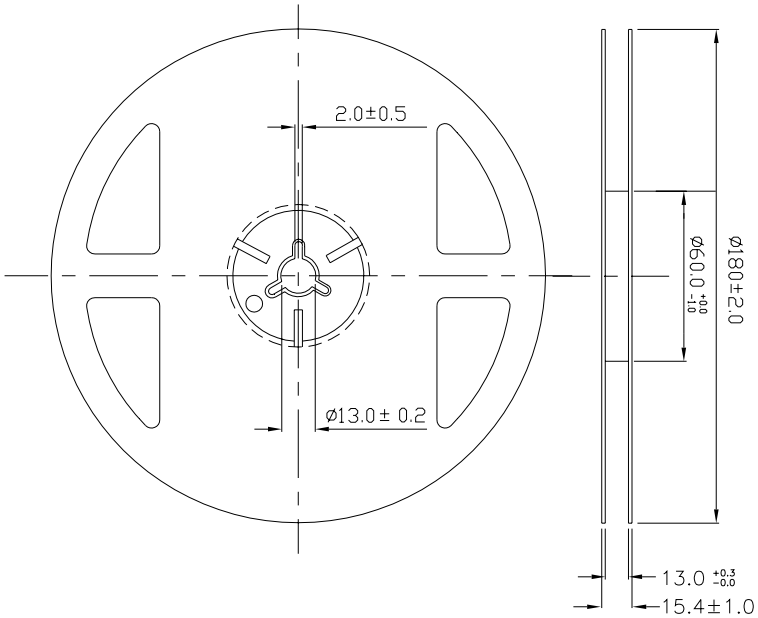

Note: The tolerances unless mentioned are ±0.1, unit=mm.

EVERLIGHT ELECTRONICS CO.,LTD

28-21SUGC/S400-A4/TR8

Loaded quantity per reel 2000 PCS/reel

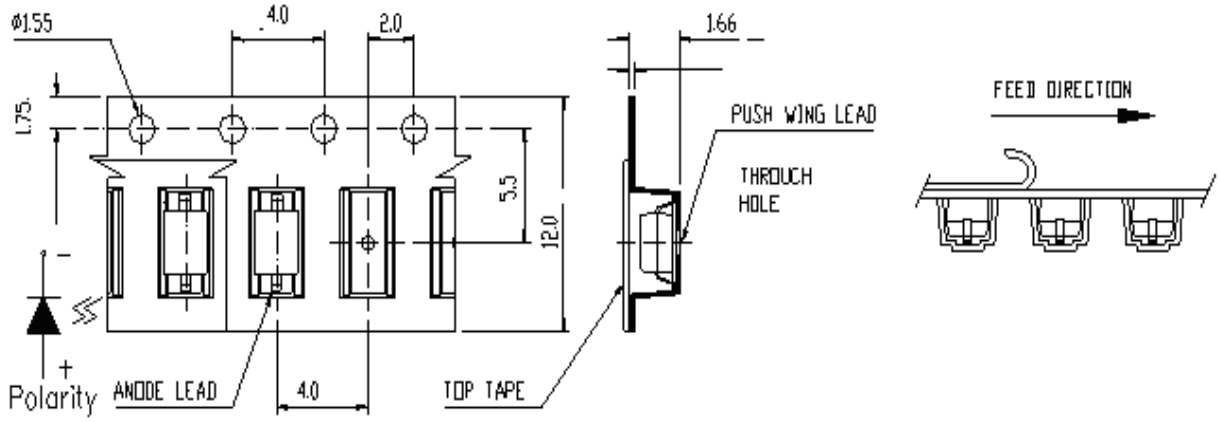

Note: Tolerances Unless Dimension is ±0.1mm , Unit = mm

Moisture Resistant Packaging

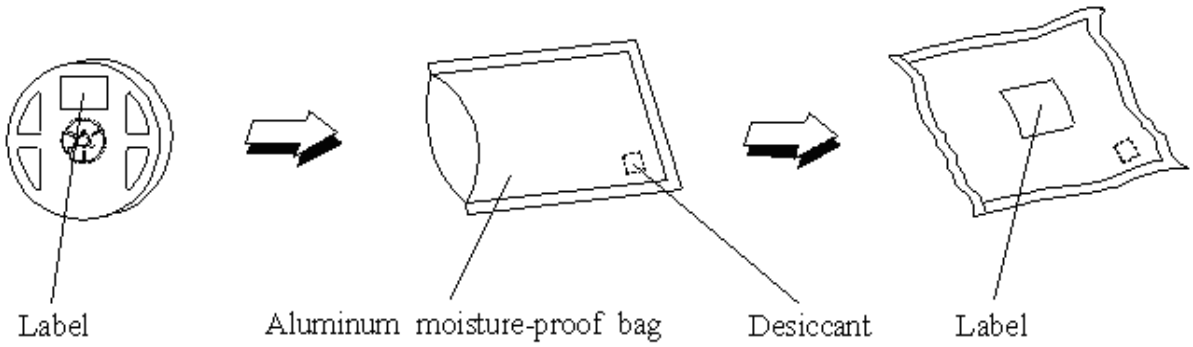

EVERLIGHT ELECTRONICS CO.,LTD

28-21SUGC/S400-A4/TR8

Reliability Test Items And Conditions

The reliability of products shall be satisfied with items listed below.
Confidence level : 90 %
LTPD : 10 %

No.	Items	Test Condition	Test Hours/Cycles	Sample Size	Ac/Re
1	Reflow Soldering	Temp. : 260℃±5℃ Min. 5 sec.	6 Min.	22 Pcs.	0/1
2	Temperature Cycle	H : +100℃ 15 min. ∫ 5 min. L : -40℃ 15 min.	300 Cycles	22 Pcs.	0/1
3	Thermal Shock	H : +100℃ 5 min. ∫ 10 sec. L : -10℃ 5 min.	300 Cycles	22 Pcs.	0/1
4	High Temperature Storage	Temp. : 100℃	1000 Hrs.	22 Pcs.	0/1
5	Low Temperature Storage	Temp. : -40℃	1000 Hrs.	22 Pcs.	0/1
6	DC Operating Life	I_F = 20 mA	1000 Hrs.	22 Pcs.	0/1
7	High Temperature / High Humidity	85℃/ 85% RH	1000 Hrs.	22 Pcs.	0/1

EVERLIGHT ELECTRONICS CO.,LTD

28-21SUGC/S400-A4/TR8

Precautions For Use

1. Over-current-proof

Customer must apply resistors for protection , otherwise slight voltage shift will cause big current change (Burn out will happen).

2. Storage

2.1 Do not open moisture proof bag before the products are ready to use.

2.2 Before opening the package: The LEDs should be kept at 30℃ or less and 90%RH or less.

2.3 After opening the package: The LED's floor life is 1 year under 30℃ or less and 60% RH or less.

If unused LEDs remain, it should be stored in moisture proof packages.

2.4 If the moisture absorbent material (silica gel) has faded away or the LEDs have exceeded the storage time, baking treatment should be performed using the following conditions.

Baking treatment : 60±5℃ for 24 hours.

3. Soldering Condition

3.1 Pb-free solder temperature profile

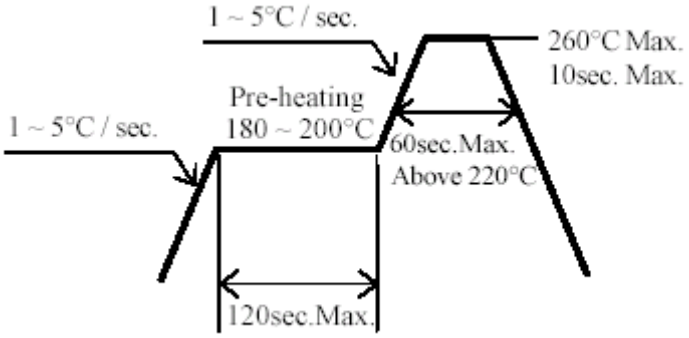

3.2 Reflow soldering should not be done more than two times.
3.3 When soldering, do not put stress on the LEDs during heating.
3.4 After soldering, do not warp the circuit board.

EVERLIGHT ELECTRONICS CO.,LTD

28-21SUGC/S400-A4/TR8

4. Soldering Iron

Each terminal is to go to the tip of soldering iron temperature less than 350℃ for 3 seconds within once in less than the soldering iron capacity 25W. Leave two seconds and more intervals, and do soldering of each terminal. Be careful because the damage of the product is often started at the time of the hand solder.

5.Repairing

Repair should not be done after the LEDs have been soldered. When repairing is unavoidable, a double-head soldering iron should be used (as below figure). It should be confirmed beforehand whether the characteristics of the LEDs will or will not be damaged by repairing.

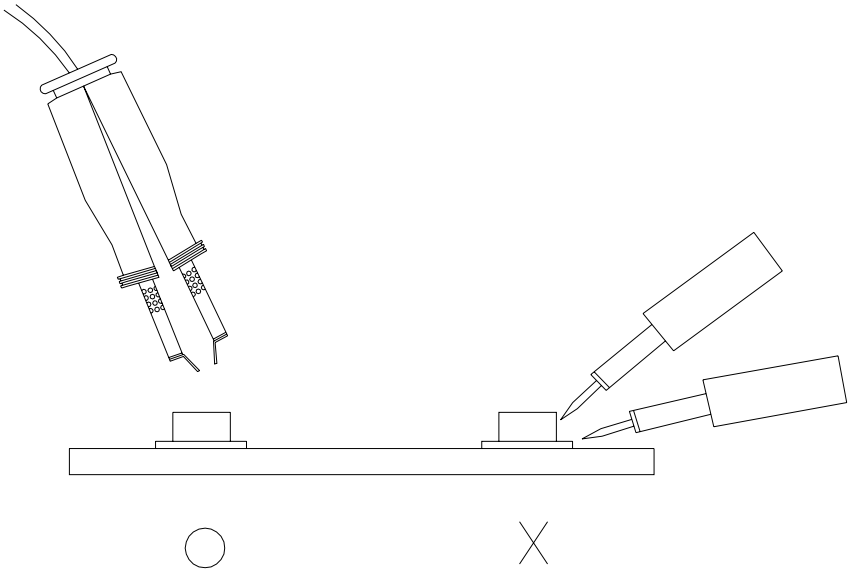

EVERLIGHT ELECTRONICS CO., LTD.
Office: No 25, Lane 76, Sec 3, Chung Yang Rd,
Tucheng, Taipei 236, Taiwan, R.O.C

Tel: 886-2-2267-2000, 2267-9936
Fax: 886-2267-6244, 2267-6189, 2267-6306
http://www.everlight.com