Excellent Integrated System Limited

Stocking Distributor

Click to view price, real time Inventory, Delivery & Lifecycle Information:

Molex Connector Corporation
0638924500

For any questions, you can email us directly:
sales@integrated-circuit.com

Mini-Mac Applicator
Specification Sheet
Order No. 63892-4500

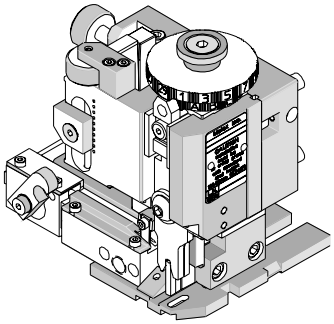

FEATURES

- Directly adapts to most automatic wire processing machines
- Applicator designed to industry standard mounting and shut height 135.80mm (5.346")
- Quick set-up time; plus the crimp height, track and feed adjustments can be set without removing the applicator from the press
- Fine adjustment allows users to achieve target with little effort by adjusting in increments of .015mm (.0006") for conductor crimp height and .063mm (.0025") for insulation height
- Independent adjustment rings allow users to quickly adjust the conductor or insulation crimp height without affecting each other.

SCOPE

Products: 2.36mm (.093") Diameter, Standard .093" Pin and Socket Crimp Terminal, 14-18 AWG.

Terminal Series No.	Terminal Order No.		Wire Size		Insulation Diameter		Strip Length	
			AWG	mm²	mm	In.	mm	In.
7238	02-09-1111		14-18	2.00-0.80	3.56 Max.	.140 Max.	4.32-4.95	.170-.195
7239	02-09-2111	02-09-2154	14-18	2.00-0.80	3.56 Max.	.140 Max.	4.32-4.95	.170-.195

DEFINITION OF TERMS

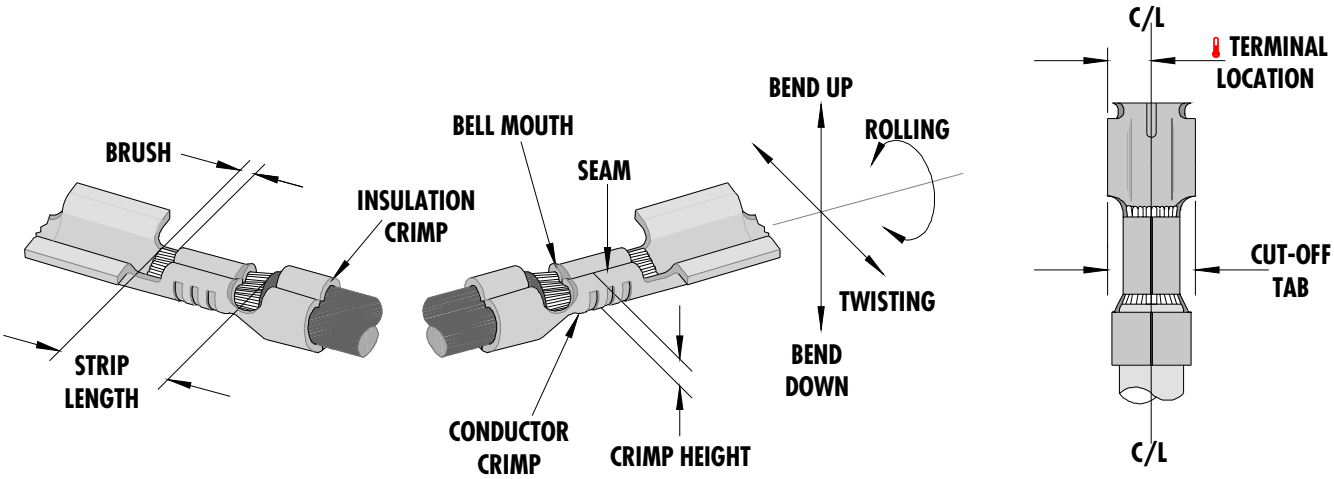

Terminal is to be centrally located between the two (2) cut-off tab edges by one half of the total cut-off tab tolerance.
This illustration is a generic terminal representation and not an exact image of any terminal listed in the scope.

CRIMP SPECIFICATIONS

Terminal Series No.	Bell mouth		Cut-off Tab		Conductor Brush	
	mm	In.	mm	In.	mm	In.
7238			3.53-3.69	.139-.145		
7239			3.53-3.69	.139-.145		

Terminal Series No.	Bend up	Bend down	Twist	Roll	Punch Width (Ref)				Seam
					Conductor		Insulation		
	Degree		Degree		mm	In.	mm	In.	
7238					2.30	.091	3.48	.137	Seam shall not be open and no wire allowed out of the crimping area
7239					2.30	.091	3.48	.137	

NOTE: Some of the specifications in these charts above are intentionally left blank due to the fact that the information does not currently exist.

After crimping, the conductor profile should measure the following.

Terminal Series No.	Wire Size		Conductor				Pull Force Minimum	
			Crimp Height		Crimp Width (REF)			
	AWG	mm^2	mm	In.	mm	In.	N	Lb.
7238	14	2.00	1.75-1.70	.069-.067			177.9	40.00
	16	1.30	1.57-1.52	.062-.060			155.6	35.00
	18	0.80	1.52-1.47	.060-.058			133.4	30.00
7239	14	2.00	1.75-1.70	.069-.067			177.9	40.00
	16	1.30	1.57-1.52	.062-.060			155.6	35.00
	18	0.80	1.52-1.47	.060-.058			133.4	30.00

Pull Force should be measured with no influence from the insulation crimp.
The above specifications are guidelines to an optimum crimp.

PARTS LIST

Mini-Mac Applicator 63892-4500				
Item	**Order No**	**Engineering No.**	**Description**	**Quantity**
Perishable Tooling				
	63892-4570	63892-4570	Tool Kit (All "Y" Items)	REF
1	11-18-5212	60706-42	Conductor Punch	1 Y
2	11-18-4060	60706-22	Combination Anvil	1 Y
3	11-18-4059	60706-21	Insulation Punch	1 Y
4	11-18-4447	60706-31	Cut-Off Punch	1 Y
5	11-18-4044	60706-6	Cut-off Die Plate	1 Y
Other Components				
6	11-17-0094	1739-37	Compression Spring	1
7	11-17-1172	4151-20	Terminal Drag Plate	1
8	11-18-4040	60706-2	Cover Plate	1
9	11-18-4042	60706-4	Terminal Guide	1
10	11-18-4043	60706-5	Insulation Punch Holder	1
11	11-18-4422	60706-28	Hold Down Plunger	1
12	11-18-4423	60706-29	Stripper and Wire Stop	1
13	11-18-4446	60706-30	Stripper and Wire Stop Holder	1
14	11-18-4562	60700-15	Slug Ramp	1
15	63803-5105	63803-5105	Conductor Bushing	1
Frame				
16	63801-3201	63801-3201	Top	1
17	63801-3282	63801-3282	Base	1
18	63801-6550	63801-6550	Track	1
Hardware				
19	N/A	N/A	M3 by 8 Long SHCS	4**
20	N/A	N/A	M4 by 12 Long BHCS	2**
21	N/A	N/A	M4 by 16 Long SHCS	2**
22	N/A	N/A	M8 by 20 Long BHCS	1**
23	N/A	N/A	#6-32 by 3/8" Long BHCS	3**
24	N/A	N/A	#8-32 by 1/4" Long BHCS	1**
25	N/A	N/A	#1/4-20 by 1/2" Long SHCS	2**
26	N/A	N/A	1/8 Diameter by 3/8" Long Roll Pin	2**
** Available from an industrial supply company such as MSC (1-800-645-7270).				

Assembly Drawing

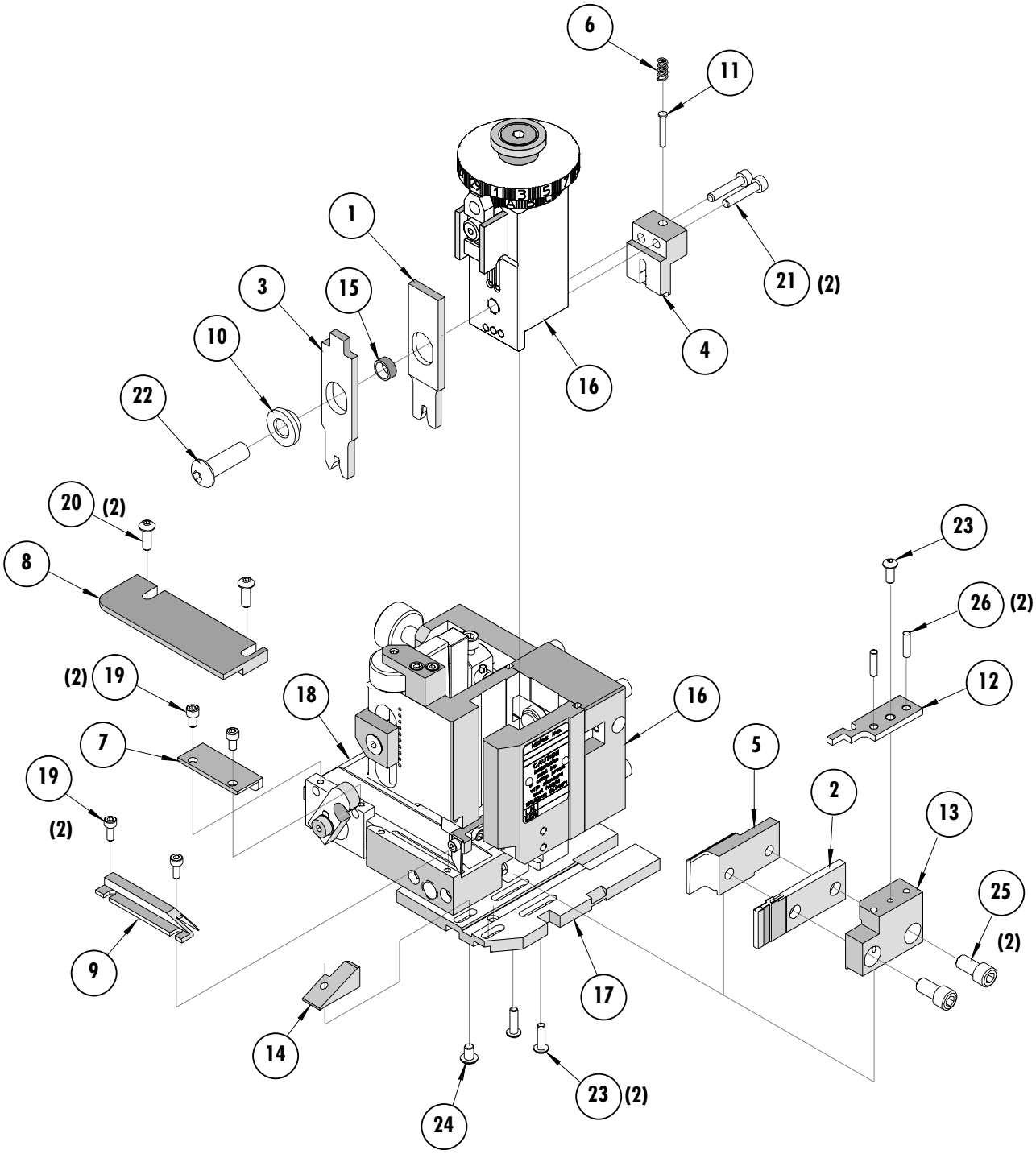

Figure 1

NOTES

1. Molex recommends an extra perishable tooling kit be maintained at your facility.
2. Verify tooling alignment by manually cycling the press and applicator before crimping under power. Check that all screws are tight.
3. Slugs, terminals, dirt, and oil should be kept clear of work area.
4. Wear safety glasses at all times.
5. For recommended maintenance refer to the Mini-Mac Manual.

CAUTION: This applicator should only be used in a press with a shut height of 135.80 mm (5.346"). Tooling damage could result at a lower setting

CAUTION: To prevent injury, never operate this applicator without the guards supplied with the press or wire-processing machine in place. Reference the press or wire processing manufacturer's instruction manual.

CAUTION: Molex crimp specifications are valid only when used with Molex terminals, applicators and tooling.

Contact Information

For more information on Molex application tooling please contact Molex at 1-800-786-6539.

Americas Headquarters
Lisle, Illinois 60532 U.S.A.
1-800-78MOLEX
amerinfo@molex.com

Far East North Headquarters
Yamato, Kanagawa, Japan
81-462-65-2324
feninfo@molex.com

Far East South Headquarters
Jurong, Singapore
65-6-268-6868
fesinfo@molex.com

European Headquarters
Munich, Germany
49-89-413092-0
eurinfo@molex.com

Corporate Headquarters
2222 Wellington Ct.
Lisle, IL 60532 U.S.A.
630-969-4550
Fax: 630-969-1352

Visit our Web site at http://www.molex.com