Excellent Integrated System Limited

Stocking Distributor

Click to view price, real time Inventory, Delivery & Lifecycle Information:

Molex Connector Corporation
0639004800

For any questions, you can email us directly:
sales@integrated-circuit.com

FineAdjust Applicator Specification Sheet Part No. 63900-4800

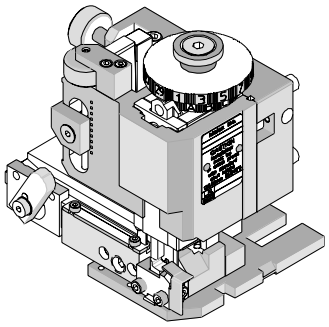

FEATURES

- Quick punch removal with the push of a button for fast and easy tooling change
- Applicator designed to industry standard mounting and shut height 135.80mm (5.346")
- Quick set-up time; plus the crimp height, track and feed adjustments can be set without removing the applicator from the press
- Fine adjustment allows users to achieve target with little effort by adjusting in increments of .015mm (.0006") for conductor crimp height and .063mm (.0025") for insulation height
- Independent adjustment rings allow users to quickly adjust the conductor or insulation crimp height without affecting each other
- Directly adapts to most automatic wire processing machines

SCOPE

Products: 3.96mm (.156") Pitch Micro SPOX™ Crimp Terminal, 22-30 AWG.

Terminal Series No	Terminal Order No.	Wire Size		Insulation Diameter		Strip Length	
		AWG	mm²	mm	In.	mm	In.
5225	08-70-1029	22-28	0.35-0.08	1.20-2.60	.047-.102	3.00-3.50	.118-.138

DEFINITION OF TERMS

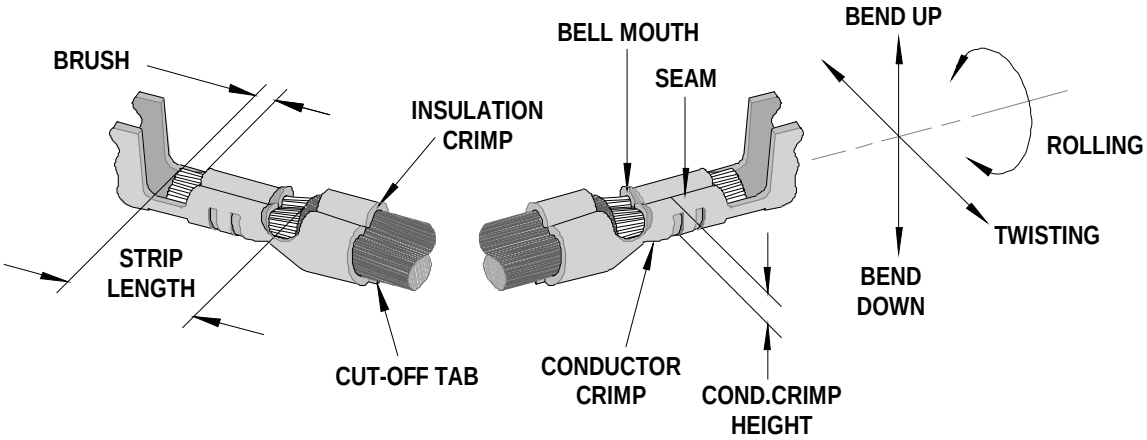

The above terminal drawing is a generic terminal representation. It is not an image of a terminal listed in the scope.

Fine Adjust Applicator for 3.96mm (.156") Pitch Micro SPOX™ Crimp Terminal Crimp Terminals

CRIMP SPECIFICATION

Terminal Series No.	Bell mouth		Cut-off Tab Maximum		Conductor Brush	
	mm	In.	mm	In.	mm	In.
5225	0.20-0.70	.008-.028	0.40	.016	0.00-1.00	.000-.039

Terminal Series No.	Bend up	Bend down	Twist	Roll	Punch Width mm (Ref)				Seam
	Degree		Degree		Conductor		Insulation		
					mm	In	mm	In	
5225	6	0	3	8	1.40	.055	2.50	.098	Seam shall not be open and no wire allowed out of the crimping area

After crimping, the conductor profile should measure the following.

Terminal Series No.	Wire Size		Crimp Height		Pull Force Minimum	
	AWG	mm^2	mm	In.	N	Lb.
5225	22	0.35	0.91-0.96	.036-.038	39.1	8.8
	24	0.20	0.83-0.88	.033-.035	29.3	6.6
	26	0.12	0.78-0.83	.031-.033	19.6	4.4
	28	0.08	0.75-0.80	.030-.032	9.8	2.2

Pull Force should be measured with no influence from the insulation crimp.

The above specifications are guidelines to an optimum crimp.

Fine Adjust Applicator for 3.96mm (.156") Pitch Micro SPOX™ Crimp Terminal Crimp Terminals

PARTS LIST

FineAdjust Applicator 63900-4800				
Item	**Order No**	**Engineering No.**	**Description**	**Quantity**
Perishable Tooling				
	63900-4870	63900-4870	Tool Kit (All "Y" Items)	REF
1	63444-1417	63444-1417	Conductor Punch	1 Y
2	63445-1436	63445-1436	Conductor Anvil	1 Y
3	63446-2522	63446-2522	Insulation Punch	1 Y
4	63445-2535	63445-2535	Insulation Anvil	1 Y
5	63443-0002	63443-0002	Cut-Off Plunger	1 Y
6	63443-0012	63443-0012	Front Plunger Retainer	1 Y
Other Components (REF 004450)				
7	11-18-4083	60707-8	Feed Guide	1
8	11-24-1067	4996-4	Cut-off Plunger Spring	1
9	11-40-4039	8302-5	Front Plunger Striker	1
10	63443-0009	63443-0009	Front Scrap Chute	1
11	63443-0024	63443-0024	Key	1
12	63443-0090	63443-0090	Wire Stop	1
13	63443-1703	63443-1703	17.30mm Height Spacer	1
14	63443-2216	63443-2216	16.00mm Coarse Spacer	1
15	63443-2302	63443-2302	3.10mm Fine Spacer	1
16	63443-6111	63443-6111	Rear Cover	1
Frame				
17	63800-4901	63800-4901	Top	1
18	63801-3281	63801-3281	Base	1
19	63801-4650	63801-4650	Track	1
Hardware				
20	N/A	N/A	M3 by 6 Long SHCS	2**
21	N/A	N/A	M3 by 6 Long FHCS	1**
22	N/A	N/A	M4 by 6 Long SHCS	2**
23	N/A	N/A	M4 by 12 Long BHCS	2**
24	N/A	N/A	M4 by 50 Long SHCS	2**
25	N/A	N/A	M5 by 12 Long SHCS	1**
26	N/A	N/A	#10-32 by 3/8"Long Flat Point SSS	1**
27	N/A	N/A	#10-32 Hex Jam Nut	1**
** Available from an industrial supply company such as MSC (1-800-645-7270).				

Fine Adjust Applicator for 3.96mm (.156") Pitch Micro SPOX™ Crimp Terminal Crimp Terminals

Assembly Drawing

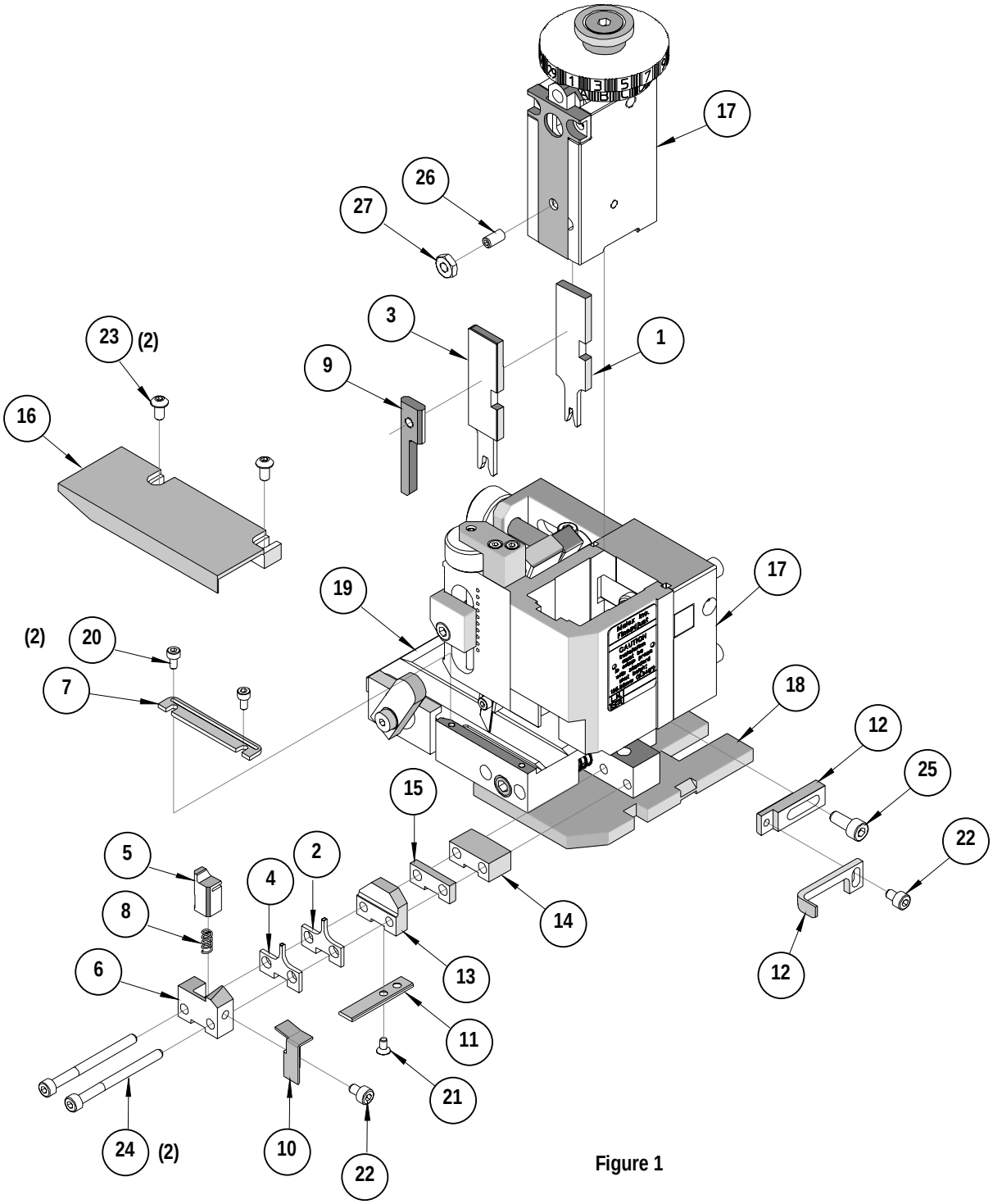

Figure 1

NOTES

1. Molex recommends an extra perishable tooling kit be maintained at your facility.
2. Verify tooling alignment by manually cycling the press and Applicator before crimping under power. Check that all screws are tight.
3. Slugs, Terminals, Dirt and Oil should be kept clear of work area.
4. Wear safety glasses at all times.
5. For recommended maintenance refer to the FineAdjust Manual.

CAUTION: This applicator should only be used in a press with a shut height of 135.8 mm (5.346"). Tooling damage could result at a lower setting.

CAUTION: To prevent injury never operate this Applicator without the guards supplied with the press or wire-processing machine in place. Reference the press or wire processing manufacturer's instruction manual.

CAUTION: Molex crimp specifications are valid only when used with Molex terminals, applicators and tooling.

Americas Headquarters
Lisle, Illinois 60532 U.S.A.
1-800-78MOLEX
amerinfo@molex.com

Far East North Headquarters
Yamato, Kanagawa, Japan
81-462-65-2324
feninfo@molex.com

Far East South Headquarters
Jurong, Singapore
65-6-268-6868
fesinfo@molex.com

European Headquarters
Munich, Germany
49-89-413092-0
eurinfo@molex.com

Corporate Headquarters
2222 Wellington Ct.
Lisle, IL 60532 U.S.A.
630-969-4550
Fax: 630-969-1352

Visit our Web site at http://www.molex.com