# Excellent Integrated System Limited

Stocking Distributor

Click to view price, real time Inventory, Delivery & Lifecycle Information:

Molex Connector Corporation
0752372273

For any questions, you can email us directly:
sales@integrated-circuit.com

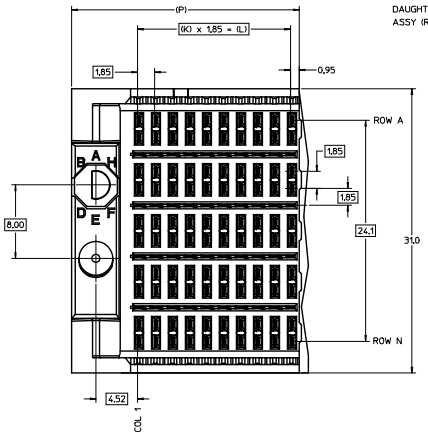


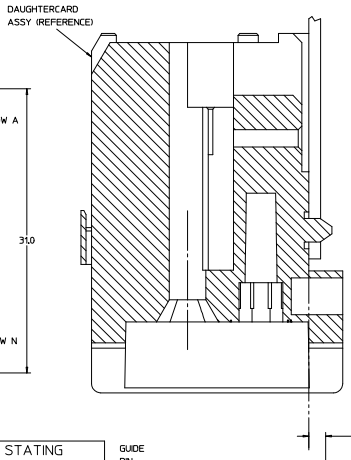


NOTES:
1. MATERIAL: HOUSING - LIQUID CRYSTAL POLYMER (LCP) GLASS-FILLED. UL 94V-0. COLOR - GRAY. SIGNAL CONTACT AND GROUND BLADE - HIGH PERFORMANCE COPPER ALLOY.
2. FINISHES: SELECTIVE GOLD (Au) ON CONTACT AREA. SELECTIVE MATTE TIN (Sn) ON PCB TAILS. NICKEL (Ni) OVERALL.
3. THIS PART CONFORMS TO MOLEX PRODUCT SPECIFICATION PS-75221-999.
4. FOR MIXED CONTACT MATING LENGTHS CONSULT MOLEX FOR AVAILABILITY. CONTACT PAIRS MUST BE THE SAME LENGTH.
5. FOR SPECIFIC PART NUMBER AND MATING INFORMATION PLEASE REFER TO CHART.
6. PACKAGE PER PK-70873-565.
7. MARK PART NUMBER AND DATE CODE APPROXIMATELY WHERE SHOWN.
8. OPTIONAL HOLE LOCATION FOR GROUNDED GUIDE PIN OR ADDITIONAL GUIDE PIN SUPPORT. FOR GROUNDED GUIDE PIN. HOLE TO BE PLATED. DRILL SIZE ø2,58. PAD SIZE ø5,50
9. THESE PARTS CONFORM TO MOLEX COSMETIC SPECIFICATION PS-45499-002 CLASS B.
10. MAPS (MOLEX ADVANCED PLATING SYSTEM).




| PIN LENGTH DIM "M" | GOLD (Au) THICKNESS micrometers |
|---|---|
| 0=3,55 mm | 0,25 (MAPS) |
| 1=4,55 mm | |
| 2=5,55 mm | |
| 3=3,55 mm | 0,76 |
| 4=4,55 mm | |
| 5=5,55 mm | |
| 7=3,55 mm | 1,27 |
| 8=4,55 mm | |
| 9=5,55 mm | |

ROWS AG & NG RECOMMENDED FOR ALL APPLICATIONS. THESE ROWS SHOULD BE CONNECTED TO GROUND

| PART NUMBER TABLE | | | | |
|---|---|---|---|---|
| ASSY PART NO. | K | L | P | TOTAL NO. OF DIFFERENTIAL PAIRS |
| 75237-210* | 9 | 16,65 | 24,78 | 50 |
| 75237-220* | 24 | 44,40 | 52,53 | 125 |

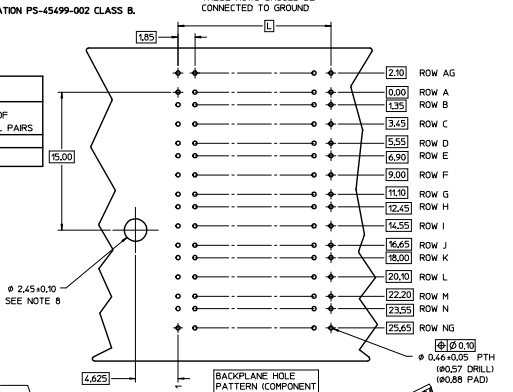


THE PRIMARY CARTON WITH A LABEL STATING "ELV AND RoHS COMPLAINT" IS LEAD FREE. CARTONS WITHOUT THIS LABEL MAY CONTAIN LEAD.

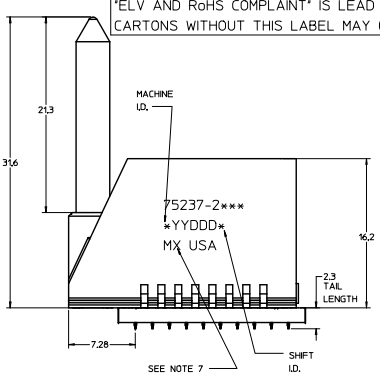


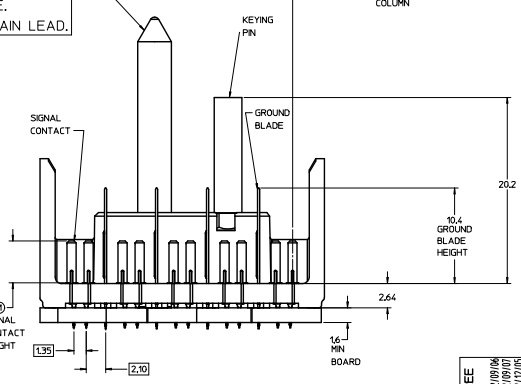


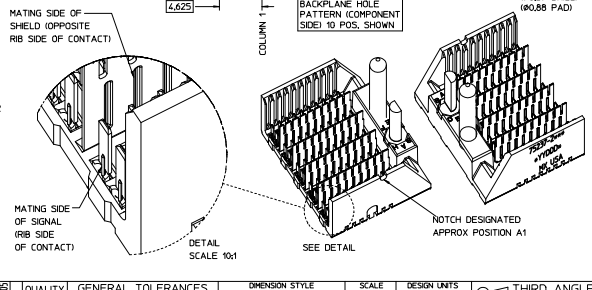


| P/N 75237-( ) | -**0* | -**1* | -**2* | -**3* | -**4* | -**5* | -**6* | -**7* | -**8* |
|---|---|---|---|---|---|---|---|---|---|
| KEYING PIN ORIENTATION | 0 | A | B | C | D | E | F | G | H |

LEAD-FREE PLATING

REV TO LEAD-FREE
EC No: UCP2013-0690
DRAWNGES 2012/09/06
CHKD:MOLLE 2012/09/07
APPR:SMILLER 2012/12/05
REV DESCRIPTION
C

QUALITY SYMBOLS: ▽=0, ▽=0, ▽=0

| GENERAL TOLERANCES (UNLESS SPECIFIED) | mm | INCH |
|---|---|---|
| 4 PLACES | ± --- | ± --- |
| 3 PLACES | ± --- | ± --- |
| 2 PLACES | ± 0,25 | ± --- |
| 1 PLACE | ± 0,38 | ± --- |
| 0 PLACE | ± | ± |
| ANGULAR ±1/2° | | |

DRAFT WHERE APPLICABLE MUST REMAIN WITHIN DIMENSIONS

| DIMENSION STYLE MM ONLY | | SCALE 5:1 | DESIGN UNITS METRIC | THIRD ANGLE PROJECTION |
|---|---|---|---|---|
| DRAWN BY | DATE | TITLE | | |
| NMARTIN | 2004/03/11 | GBX 5-PAIR LF LEFT END BACKPLANE SALES ASSEMBLY | | |
| CHECKED BY | DATE | | | |
| SREED | 2004/03/11 | | | |
| APPROVED BY | DATE | | | |
| CBIXLER | 2004/03/11 | | | |
| MATERIAL NO. SEE CHART | | DOCUMENT NO. SD-75237-210 | | SHEET NO. 1 OF 1 |

SIZE D

THIS DRAWING CONTAINS INFORMATION THAT IS PROPRIETARY TO MOLEX INCORPORATED AND SHOULD NOT BE USED WITHOUT WRITTEN PERMISSION

tb_frame_D_P_AM_T
Rev. G 2012/09/11