Excellent Integrated System Limited

Stocking Distributor

Click to view price, real time Inventory, Delivery & Lifecycle Information:

Molex Connector Corporation
0761553107

For any questions, you can email us directly:
sales@integrated-circuit.com

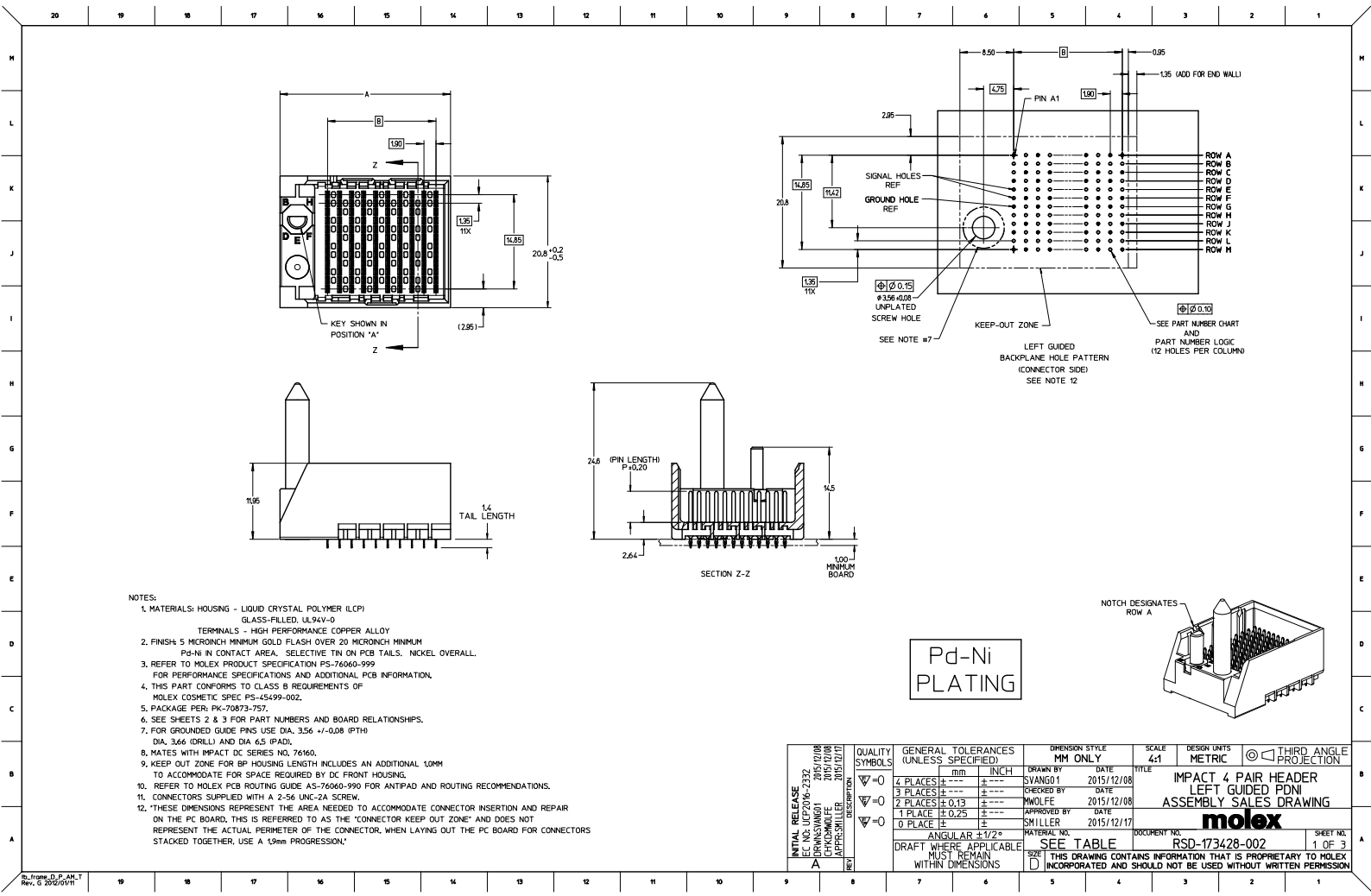

NOTES:

1. MATERIALS: HOUSING - LIQUID CRYSTAL POLYMER (LCP) GLASS-FILLED, UL94V-0
   TERMINALS - HIGH PERFORMANCE COPPER ALLOY
2. FINISH: 5 MICROINCH MINIMUM GOLD FLASH OVER 20 MICROINCH MINIMUM Pd-Ni IN CONTACT AREA. SELECTIVE TIN ON PCB TAILS. NICKEL OVERALL.
3. REFER TO MOLEX PRODUCT SPECIFICATION PS-76060-999 FOR PERFORMANCE SPECIFICATIONS AND ADDITIONAL PCB INFORMATION.
4. THIS PART CONFORMS TO CLASS B REQUIREMENTS OF MOLEX COSMETIC SPEC PS-45499-002.
5. PACKAGE PER: PK-70873-757.
6. SEE SHEETS 2 & 3 FOR PART NUMBERS AND BOARD RELATIONSHIPS.
7. FOR GROUNDED GUIDE PINS USE DIA. 3.56 +/-0.08 (PTH) DIA. 3.66 (DRILL) AND DIA 6.5 (PAD).
8. MATES WITH IMPACT DC SERIES NO. 76160.
9. KEEP OUT ZONE FOR BP HOUSING LENGTH INCLUDES AN ADDITIONAL 1.0MM TO ACCOMMODATE FOR SPACE REQUIRED BY DC FRONT HOUSING.
10. REFER TO MOLEX PCB ROUTING GUIDE AS-76060-990 FOR ANTIPAD AND ROUTING RECOMMENDATIONS.
11. CONNECTORS SUPPLIED WITH A 2-56 UNC-2A SCREW.
12. "THESE DIMENSIONS REPRESENT THE AREA NEEDED TO ACCOMMODATE CONNECTOR INSERTION AND REPAIR ON THE PC BOARD. THIS IS REFERRED TO AS THE "CONNECTOR KEEP OUT ZONE" AND DOES NOT REPRESENT THE ACTUAL PERIMETER OF THE CONNECTOR. WHEN LAYING OUT THE PC BOARD FOR CONNECTORS STACKED TOGETHER, USE A 1.9mm PROGRESSION."

Pd-Ni PLATING

INITIAL RELEASE	EC NO: UCP2016-2332	DRWN:SVANG01	CHK:DCMOLFE	APPR:SMILLER	2015/12/08	2015/12/08	2015/12/17	DESCRIPTION	A	REV

QUALITY SYMBOLS	GENERAL TOLERANCES (UNLESS SPECIFIED) mm	INCH
=0	4 PLACES ± ---	± ---
=0	3 PLACES ± ---	± ---
=0	2 PLACES ± 0.13	± ---
=0	1 PLACE ± 0.25	± ---
=0	0 PLACE ±	±
	ANGULAR ±1/2°	
	DRAFT WHERE APPLICABLE MUST REMAIN WITHIN DIMENSIONS	

DIMENSION STYLE: MM ONLY	SCALE: 4:1	DESIGN UNITS: METRIC	THIRD ANGLE PROJECTION
DRAWN BY: SVANG01	DATE: 2015/12/08	TITLE: IMPACT 4 PAIR HEADER LEFT GUIDED PDNI ASSEMBLY SALES DRAWING	
CHECKED BY: MWOLFE	DATE: 2015/12/08		
APPROVED BY: SMILLER	DATE: 2015/12/17	molex	
MATERIAL NO.: SEE TABLE		DOCUMENT NO.: RSD-173428-002	SHEET NO.: 1 OF 3
SIZE: D	THIS DRAWING CONTAINS INFORMATION THAT IS PROPRIETARY TO MOLEX INCORPORATED AND SHOULD NOT BE USED WITHOUT WRITTEN PERMISSION		

tb_frame_D_P_AM_T Rev. G 2012/01/11

Distributor of Molex Connector Corporation: Excellent Integrated System Limited
Datasheet of 0761553107 - IMPACT BP 4X10 GL SN
Contact us: sales@integrated-circuit.com Website: www.integrated-circuit.com

PART NUMBER TABLE

MATERIAL NUMBER	# OF COLUMNS	# OF DIFF PAIR	DIM "A"	DIM "B"	
173428-*3**	6	24	19.3	9.50	GUIDE LEFT END WALL OPTION
173428-*8**	8	32	23.1	13.30	
173428-*1**	10	40	26.9	17.10	
173428-*6**	16	64	38.3	28.50	

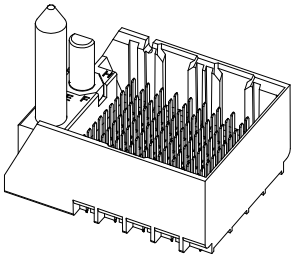

GUIDE LEFT
END WALL OPTION

MATERIAL NUMBER	# OF COLUMNS	# OF DIFF PAIR	DIM "A"	DIM "B"	
173428-*3**	6	24	17.9	9.50	GUIDE LEFT OPEN WALL OPTION
173428-*8**	8	32	21.7	13.30	
173428-*1**	10	40	25.5	17.10	
173428-*6**	16	64	36.9	28.50	

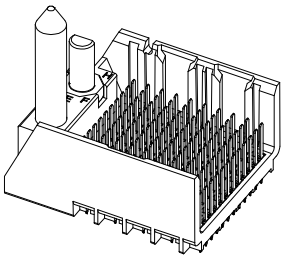

GUIDE LEFT
OPEN WALL OPTION

PART NUMBER LOGIC

173428-****

MODULE TYPE
3 = GUIDE LEFT, TIN
7 = GUIDE LEFT END WALL, TIN

# OF COLUMNS
1 = 10 COL
3 = 6 COL
6 = 16 COL
8 = 8 COL

KEY ORIENTATION
0 = NO KEY
1 = A
2 = B
3 = C
4 = D
5 = E
6 = F
7 = G
8 = H

PIN LENGTH (P)
3 = 4.50 (SHORT COMPLIANT, 0.46±0.05 PTH)
4 = 4.90 (SHORT COMPLIANT, 0.46±0.05 PTH)
5 = 5.50 (SHORT COMPLIANT, 0.46±0.05 PTH)
6 = 4.50 (MICRO COMPLIANT, 0.39±0.05 PTH)
7 = 4.90 (MICRO COMPLIANT, 0.39±0.05 PTH)
8 = 5.50 (MICRO COMPLIANT, 0.39±0.05 PTH)

SEE SHEET 1
EC NO: UCP2016-2332 2015/12/08
DRWN:SVANG01 2015/12/08
CHKD:MWOLFE 2015/12/08
APPR:SMILLER 2015/12/17
DESCRIPTION
REV A

QUALITY SYMBOLS
=0
=0
=0

GENERAL TOLERANCES (UNLESS SPECIFIED)

	mm	INCH
4 PLACES	± ---	± ---
3 PLACES	± ---	± ---
2 PLACES	± 0.13	± ---
1 PLACE	± 0.25	± ---
0 PLACE	±	±

ANGULAR ±1/2°
DRAFT WHERE APPLICABLE MUST REMAIN WITHIN DIMENSIONS

DIMENSION STYLE: MM ONLY
SCALE: 3:1
DESIGN UNITS: METRIC
THIRD ANGLE PROJECTION

		DATE
DRAWN BY	SVANG01	2015/12/08
CHECKED BY	MWOLFE	2015/12/08
APPROVED BY	SMILLER	2015/12/17

TITLE
IMPACT 4 PAIR HEADER
LEFT GUIDED PDNI
ASSEMBLY SALES DRAWING

molex

MATERIAL NO. SEE TABLE
DOCUMENT NO. RSD-173428-002
SHEET NO. 2 OF 3
SIZE C

THIS DRAWING CONTAINS INFORMATION THAT IS PROPRIETARY TO MOLEX INCORPORATED AND SHOULD NOT BE USED WITHOUT WRITTEN PERMISSION

tb_frame_C_P_AM_T
Rev. G 2012/01/11

Distributor of Molex Connector Corporation: Excellent Integrated System Limited
Datasheet of 0761553107 - IMPACT BP 4X10 GL SN
Contact us: sales@integrated-circuit.com Website: www.integrated-circuit.com

IMPACT 4 PAIR
BOARD RELATIONSHIPS

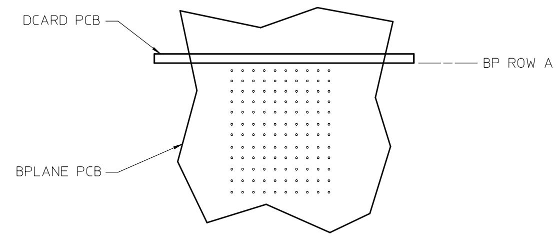

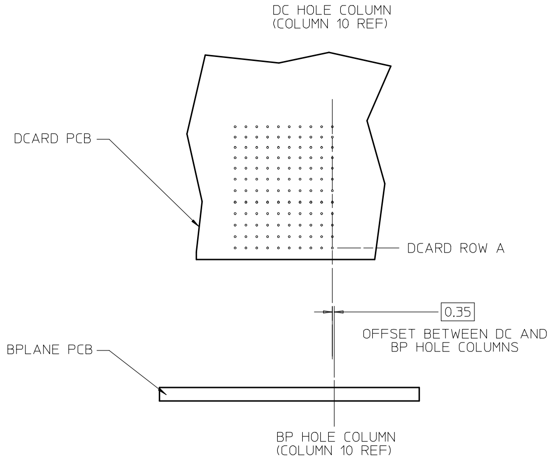

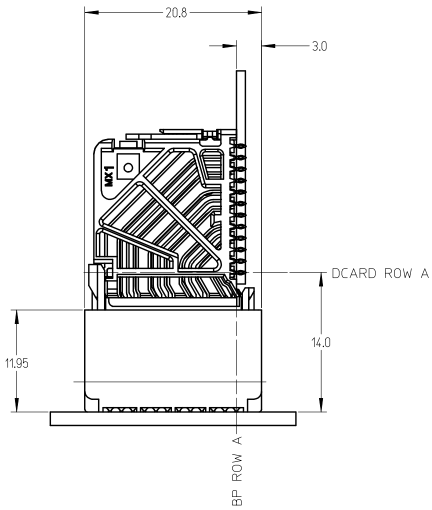

SEE SHEET 1
EC NO: UCP2016-2332
DRWN:SVANG01 2015/12/08
CH'KD:MWOLFE 2015/12/08
APPR:SMILLER 2015/12/17
REV: A

QUALITY SYMBOLS	GENERAL TOLERANCES (UNLESS SPECIFIED)	mm	INCH
F =0	4 PLACES	± ---	± ---
F =0	3 PLACES	± ---	± ---
F =0	2 PLACES	± 0.13	± ---
	1 PLACE	± 0.25	± ---
	0 PLACE	±	±
	ANGULAR ±1/2°		

DRAFT WHERE APPLICABLE MUST REMAIN WITHIN DIMENSIONS

DIMENSION STYLE: MM ONLY
SCALE: 2:1
DESIGN UNITS: METRIC
THIRD ANGLE PROJECTION

		DATE
DRAWN BY	SVANG01	2015/12/08
CHECKED BY	MWOLFE	2015/12/08
APPROVED BY	SMILLER	2015/12/17

TITLE: IMPACT 4 PAIR HEADER LEFT GUIDED PDNI ASSEMBLY SALES DRAWING

molex

MATERIAL NO.: SEE TABLE
DOCUMENT NO.: RSD-173428-002
SHEET NO.: 3 OF 3
SIZE: C

THIS DRAWING CONTAINS INFORMATION THAT IS PROPRIETARY TO MOLEX INCORPORATED AND SHOULD NOT BE USED WITHOUT WRITTEN PERMISSION

tb_frame_C_P_AM_T Rev. G 2012/01/11

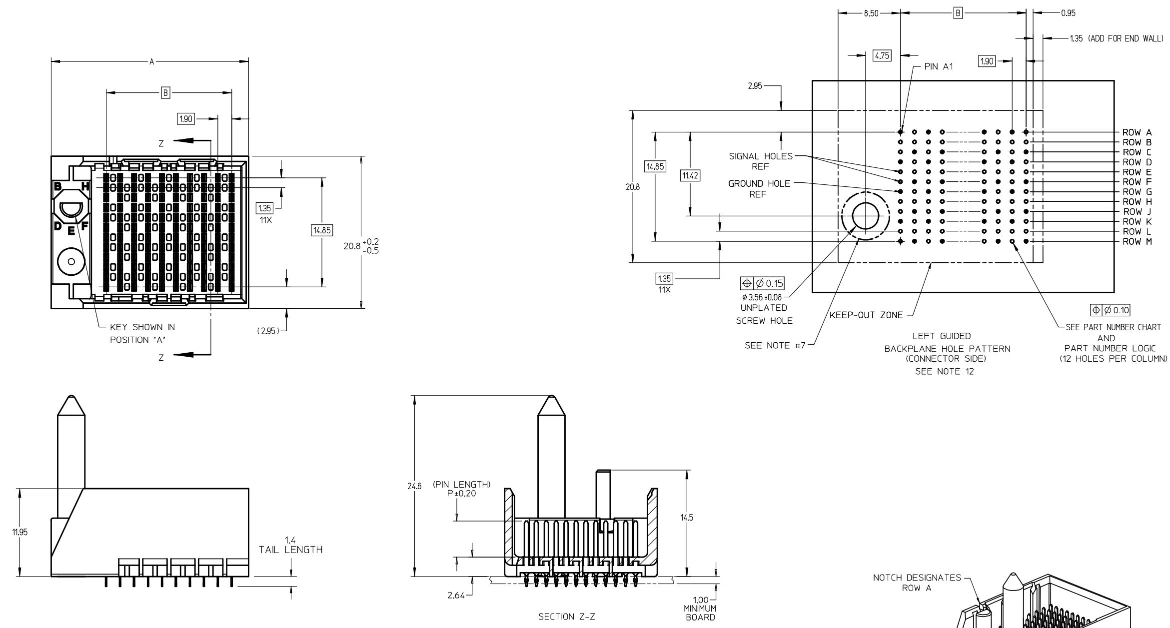

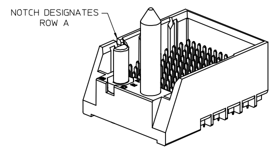

NOTES:

1. MATERIALS: HOUSING - LIQUID CRYSTAL POLYMER (LCP)
   GLASS-FILLED, UL94V-0
   TERMINALS - HIGH PERFORMANCE COPPER ALLOY
2. FINISH: 30µ MIN GOLD IN CONTACT AREA.
   SELECTIVE TIN ON PCB TAILS.
   NICKEL OVERALL.
3. REFER TO MOLEX PRODUCT SPECIFICATION PS-76060-999 FOR PERFORMANCE SPECIFICATIONS AND ADDITIONAL PCB INFORMATION.
4. THIS PART CONFORMS TO CLASS B REQUIREMENTS OF MOLEX COSMETIC SPEC PS-45499-002.
5. PACKAGE PER: PK-70873-757.
6. SEE SHEETS 2 & 3 FOR PART NUMBERS AND BOARD RELATIONSHIPS.
7. FOR GROUNDED GUIDE PINS USE DIA. 3.56 +/-0.08 (PTH) DIA. 3.66 (DRILL) AND DIA 6.5 (PAD).
8. MATES WITH IMPACT DC SERIES NO. 76160.
9. KEEP OUT ZONE FOR BP HOUSING LENGTH INCLUDES AN ADDITIONAL 1.0MM TO ACCOMMODATE FOR SPACE REQUIRED BY DC FRONT HOUSING.
10. REFER TO MOLEX PCB ROUTING GUIDE AS-76060-990 FOR ANTIPAD AND ROUTING RECOMMENDATIONS.
11. CONNECTORS SUPPLIED WITH A 2-56 UNC-2A SCREW.
12. "THESE DIMENSIONS REPRESENT THE AREA NEEDED TO ACCOMMODATE CONNECTOR INSERTION AND REPAIR ON THE PC BOARD. THIS IS REFERRED TO AS THE "CONNECTOR KEEP OUT ZONE" AND DOES NOT REPRESENT THE ACTUAL PERIMETER OF THE CONNECTOR. WHEN LAYING OUT THE PC BOARD FOR CONNECTORS STACKED TOGETHER, USE A 1.9mm PROGRESSION."

REV H — CONVERT TO LEAD-FREE — EC NO: UCP2013-2078 2012/11/26 — DRWN: TIBARRA 2012/12/18 — CH'KD: JBINGHAM 2012/12/31 — APPR: SMILLER

GENERAL TOLERANCES (UNLESS SPECIFIED)	mm	INCH
4 PLACES	± ---	± ---
3 PLACES	± ---	± ---
2 PLACES	± 0.13	± ---
1 PLACE	± 0.25	± ---
0 PLACE	±	±
ANGULAR ±1/2°		
DRAFT WHERE APPLICABLE MUST REMAIN WITHIN DIMENSIONS		

QUALITY SYMBOLS: FA =0, FC =0, FP =0

DIMENSION STYLE	MM ONLY
SCALE	4:1
DESIGN UNITS	METRIC
PROJECTION	THIRD ANGLE PROJECTION
DRAWN BY / DATE	MSANDBERG 2007/19/07
CHECKED BY / DATE	JLAURX 2007/19/07
APPROVED BY / DATE	JLAURX 2010/11/15
TITLE	IMPACT 4 PAIR HEADER LEFT GUIDED ASSEMBLY SALES DRAWING
MATERIAL NO.	SEE TABLE
DOCUMENT NO.	SD-76155-002
SHEET NO.	1 OF 3
SIZE	D

molex

THIS DRAWING CONTAINS INFORMATION THAT IS PROPRIETARY TO MOLEX INCORPORATED AND SHOULD NOT BE USED WITHOUT WRITTEN PERMISSION

tb_frame_D_P_AM_T Rev. G 2012/01/11

Distributor of Molex Connector Corporation: Excellent Integrated System Limited
Datasheet of 0761553107 - IMPACT BP 4X10 GL SN
Contact us: sales@integrated-circuit.com Website: www.integrated-circuit.com

PART NUMBER TABLE

MATERIAL NUMBER	# OF COLUMNS	# OF DIFF PAIR	DIM "A"	DIM "B"	
76155-*3**	6	24	19.3	9.50	GUIDE LEFT END WALL OPTION
76155-*8**	8	32	23.1	13.30	
76155-*1**	10	40	26.9	17.10	
76155-*6**	16	64	38.3	28.50	

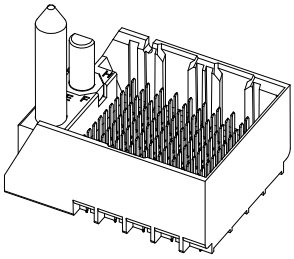

GUIDE LEFT
END WALL OPTION

MATERIAL NUMBER	# OF COLUMNS	# OF DIFF PAIR	DIM "A"	DIM "B"	
76155-*3**	6	24	17.9	9.50	GUIDE LEFT OPEN WALL OPTION
76155-*8**	8	32	21.7	13.30	
76155-*1**	10	40	25.5	17.10	
76155-*6**	16	64	36.9	28.50	

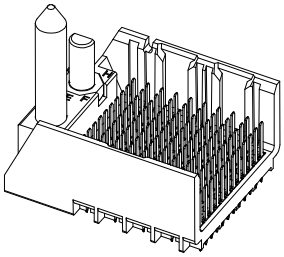

GUIDE LEFT
OPEN WALL OPTION

PART NUMBER LOGIC

76155-****

MODULE TYPE
3 = GUIDE LEFT, TIN
7 = GUIDE LEFT END WALL, TIN

# OF COLUMNS
1 = 10 COL
3 = 6 COL
6 = 16 COL
8 = 8 COL

KEY ORIENTATION
0 = NO KEY
1 = A
2 = B
3 = C
4 = D
5 = E
6 = F
7 = G
8 = H

PIN LENGTH (P)
3 = 4.50 (SHORT COMPLIANT, 0.46±0.05 PTH)
4 = 4.90 (SHORT COMPLIANT, 0.46±0.05 PTH)
5 = 5.50 (SHORT COMPLIANT, 0.46±0.05 PTH)
6 = 4.50 (MICRO COMPLIANT, 0.39±0.05 PTH)
7 = 4.90 (MICRO COMPLIANT, 0.39±0.05 PTH)
8 = 5.50 (MICRO COMPLIANT, 0.39±0.05 PTH)

SEE SHEET 1
EC NO: UCP2013-2078 2012/11/26
DRWN:T IBARRA 2012/12/18
CHKD:JB INGHAM 2012/12/31
APPR:SM LLER
DESCRIPTION
REV

QUALITY SYMBOLS
=0
=0
=0

GENERAL TOLERANCES (UNLESS SPECIFIED)

	mm	INCH
4 PLACES	± ---	± ---
3 PLACES	± ---	± ---
2 PLACES	± 0.13	± ---
1 PLACE	± 0.25	± ---
0 PLACE	±	±

ANGULAR ±1/2°
DRAFT WHERE APPLICABLE MUST REMAIN WITHIN DIMENSIONS

DIMENSION STYLE: MM ONLY
SCALE: 3:1
DESIGN UNITS: METRIC
THIRD ANGLE PROJECTION

		DATE
DRAWN BY	MSANDBERG	2007/19/07
CHECKED BY	JLAURX	2007/19/07
APPROVED BY	JLAURX	2010/11/15

TITLE: IMPACT 4 PAIR HEADER LEFT GUIDED ASSEMBLY SALES DRAWING

molex

MATERIAL NO.: SEE TABLE
DOCUMENT NO.: SD-76155-002
SHEET NO.: 2 OF 3
SIZE: C

THIS DRAWING CONTAINS INFORMATION THAT IS PROPRIETARY TO MOLEX INCORPORATED AND SHOULD NOT BE USED WITHOUT WRITTEN PERMISSION

tb_frame_C_P_AM_T
Rev. G 2012/01/11

IMPACT 4 PAIR
BOARD RELATIONSHIPS

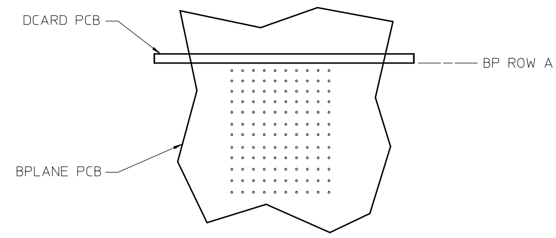

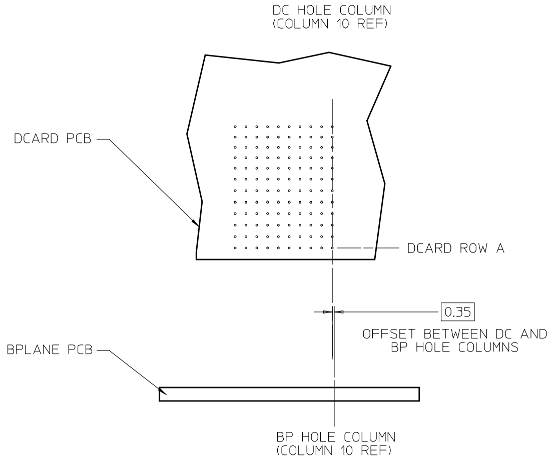

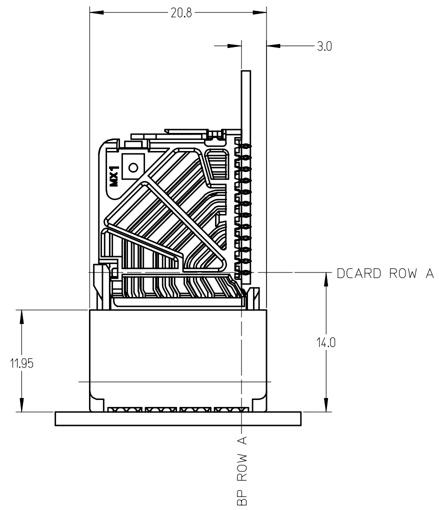

SEE SHEET 1
EC NO: UCP2013-2078
DRWN: T IBARRA 2012/11/26
CH'KD: JBINGHAM 2012/12/18
APPR: SMILLER 2012/12/31
REV H

QUALITY SYMBOLS

GENERAL TOLERANCES (UNLESS SPECIFIED)

	mm	INCH
4 PLACES	± ---	± ---
3 PLACES	± ---	± ---
2 PLACES	± 0.13	± ---
1 PLACE	± 0.25	± ---
0 PLACE	±	±

ANGULAR ±1/2°
DRAFT WHERE APPLICABLE MUST REMAIN WITHIN DIMENSIONS

DIMENSION STYLE: MM ONLY
SCALE: 2:1
DESIGN UNITS: METRIC
THIRD ANGLE PROJECTION

DRAWN BY: MSANDBERG DATE 2007/19/07
CHECKED BY: JLAURX DATE 2007/19/07
APPROVED BY: JLAURX DATE 2010/11/15

TITLE: IMPACT 4 PAIR HEADER
LEFT GUIDED ASSEMBLY
SALES DRAWING

molex

MATERIAL NO.: SEE TABLE
DOCUMENT NO.: SD-76155-002
SHEET NO.: 3 OF 3
SIZE: C

THIS DRAWING CONTAINS INFORMATION THAT IS PROPRIETARY TO MOLEX INCORPORATED AND SHOULD NOT BE USED WITHOUT WRITTEN PERMISSION

tb_frame_C_P_AM_T
Rev. G 2012/01/11