Excellent Integrated System Limited

Stocking Distributor

Click to view price, real time Inventory, Delivery & Lifecycle Information:

Molex Connector Corporation
0830410005

For any questions, you can email us directly:
sales@integrated-circuit.com

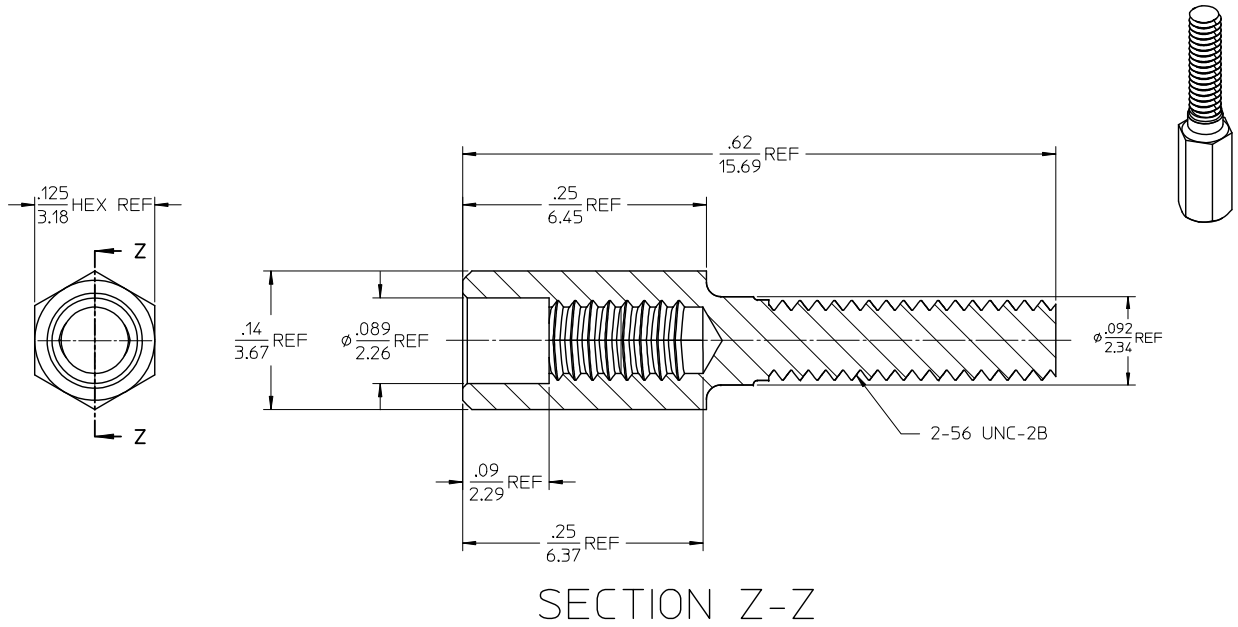

NOTES:
1) MATERIAL: STAINLESS STEEL 303, PASSIVATE PER QQ-P-35
(G) 2) 2.5 IN/LB TORQUE MAX, WHEN ATTACHING TO MOLEX HEADERS SERIES 83611, 83612, 83614, 83619.
3) RoHS COMPLIANT

REV	DESCRIPTION
G	ADD TORQUE NOTE. EC NO: IPG2013-0078 DRWN:BRUPERT 2012/10/15 CH'KD: APPR:JFMURPHY 2013/03/04

QUALITY SYMBOLS: ▼=0 ▽=0

GENERAL TOLERANCES (UNLESS SPECIFIED)

	mm	INCH
4 PLACES	± ---	± ---
3 PLACES	± ---	± .005
2 PLACES	± 0.13	± .010
1 PLACE	± 0.25	± ---
ANGULAR ±1/2°		

DRAFT WHERE APPLICABLE MUST REMAIN WITHIN DIMENSIONS

DIMENSION STYLE: IN/MM	SCALE: 10:1	DESIGN UNITS: INCH	THIRD ANGLE PROJECTION
DRAWN BY: JLOMASTR	DATE: 05/02/18	TITLE: JACKPOST 2-56 THREAD	
CHECKED BY: RDEROSS	DATE: 05/02/18		
APPROVED BY: RDEROSS	DATE: 05/02/18	MOLEX INCORPORATED	
MATERIAL NO.: 830410005		DOCUMENT NO.: SD-83041-005	SHEET NO.: 1 OF 1
SIZE: A3	THIS DRAWING CONTAINS INFORMATION THAT IS PROPRIETARY TO MOLEX INCORPORATED AND SHOULD NOT BE USED WITHOUT WRITTEN PERMISSION		

tb_frame_A3_P_AM_T
Rev. E 2006/04/15