Excellent Integrated System Limited

Stocking Distributor

Click to view price, real time Inventory, Delivery & Lifecycle Information:

Molex Connector Corporation
0191600012

For any questions, you can email us directly:
sales@integrated-circuit.com

19160

LOOSE PIECE		TAPE MOUNTED		"L" MAX.	"B" MIN G1	"D" MAX.	"E" MIN.	I.D. MIN.	O.D. MAX.	"A" DIM ±.02/0.5 G1
MATERIAL NO.	ENG. NO.	MATERIAL NO.	ENG. NO.							
191600012	NC-2214	191600070	NC-2214T	.62/15.7	.30/7.6	.19/4.8	.24/6.1	.09/2.3	.32/8.1	1.54/39.2
191600009	NC-2212	191600071	NC-2212T	.76/19.3	.30/7.6	.23/5.8	.27/6.9	.10/2.5	.36/9.1	1.63/41.4
191600002	NC-1610	191600083	NC-1610T	.90/22.8	.28/7.1	.28/7.1	.38/9.6	.15/3.8	.45/11.4	1.75/44.5
191600024	NC-8	191600028	NC-8T	1.10/27.9	.42/10.6	.36/9.1	.48/12.2	.21/5.3	.57/14.5	1.86/47.4

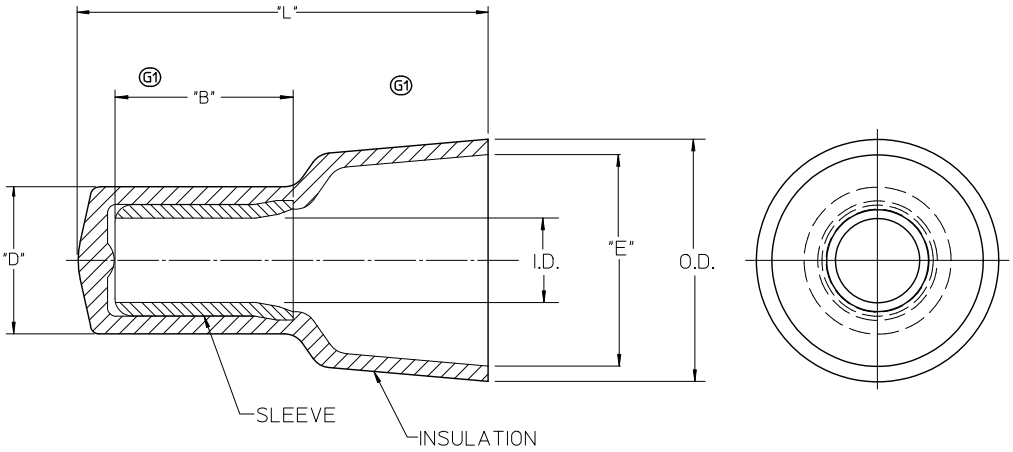

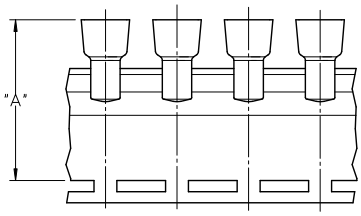

TAPE MOUNTING LOCATION

SALES DRAWING

NOTES:

1. MATERIAL: SLEEVE: TIN-PLATED COPPER
   INSULATION: 6/6 NYLON,
   NATURAL TRANSLUCENT
2. PARTS ARE ROHS COMPLIANT.

CORRECT TOLERANCES
EC NO: WNA2010-0673
DRWN:ETHRODAHL 2010/05/07
CH'KD:R. DEROSS 04/02/23
APPR: JMACNEIL 2010/06/23
DESCRIPTION
G1
REV

QUALITY SYMBOLS
▼=0
▽=0

GENERAL TOLERANCES (UNLESS SPECIFIED)

	mm	INCH
4 PLACES	± ---	± ---
3 PLACES	± ---	± ---
2 PLACES	± ---	± ---
1 PLACE	± ---	± ---
ANGULAR ±---°		

DRAFT WHERE APPLICABLE MUST REMAIN WITHIN DIMENSIONS

DIMENSION STYLE: IN/MM
SCALE: 5:1
DESIGN UNITS: INCH
THIRD ANGLE PROJECTION

		DATE
DRAWN BY	H.BEITZE	04/02/23
CHECKED BY	R.DEROSS	04/02/23
APPROVED BY	R.DEROSS	04/02/23

TITLE: CLOSED END CONNECTORS NYLON INSULATED

molex MOLEX INCORPORATED

MATERIAL NO.: SEE CHART
DOCUMENT NO.: SD-19160-001
SHEET NO.: 1 OF 1
SIZE: B

THIS DRAWING CONTAINS INFORMATION THAT IS PROPRIETARY TO MOLEX INCORPORATED AND SHOULD NOT BE USED WITHOUT WRITTEN PERMISSION

tb_frame_B_P_AM_T
Rev. E 2006/04/15