Excellent Integrated System Limited

Stocking Distributor

Click to view price, real time Inventory, Delivery & Lifecycle Information:

STMicroelectronics
STL128D

For any questions, you can email us directly:
sales@integrated-circuit.com

Distributor of STMicroelectronics: Excellent Integrated System Limited
Datasheet of STL128D - TRANS NPN 400V 4A TO-220
Contact us: sales@integrated-circuit.com Website: www.integrated-circuit.com

STL128D

High voltage fast-switching NPN power transistor

Features

- High voltage capability
- Low spread of dynamic parameters
- Very high switching speed
- Integrated antiparallel collector-emitter diode

Applications

- Electronic ballast for fluorescent lighting
- Flyback and forward single transistor low power converters

Description

These devices are high voltage fast-switching NPN power transistors. They are manufactured using high voltage multi epitaxial planar technology for high switching speeds and medium voltage capability.

They use a cellular emitter structure with planar edge termination to enhance switching speeds while maintaining the wide RBSOA. The devices are designed for use in lighting applications and low cost switch-mode power supplies.

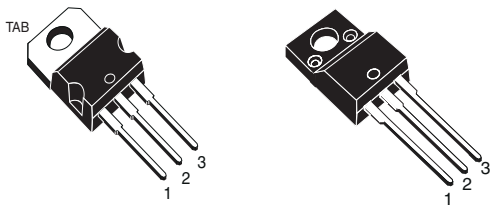

TO-220 TO-220FP

Figure 1. Internal schematic diagram

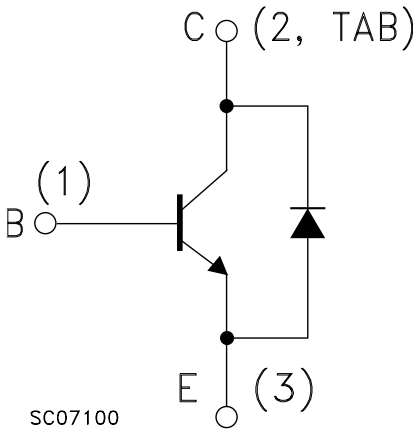

Table 1. Device summary

Order codes	Marking	Packages	Packaging
STL128D	L128D	TO-220	Tube
STL128DFP	L128DFP	TO-220FP	Tube

Distributor of STMicroelectronics: Excellent Integrated System Limited
Datasheet of STL128D - TRANS NPN 400V 4A TO-220
Contact us: sales@integrated-circuit.com Website: www.integrated-circuit.com

Content

1 Electrical ratings 3

2 Electrical characteristics 4

2.1 Electrical characteristics (curves) 5

3 Package mechanical data 7

4 Revision history 11

Distributor of STMicroelectronics: Excellent Integrated System Limited
Datasheet of STL128D - TRANS NPN 400V 4A TO-220
Contact us: sales@integrated-circuit.com Website: www.integrated-circuit.com

1 Electrical ratings

Table 2. Absolute maximum ratings

Symbol	Parameter	Value		Unit
		TO-220	TO-220FP	
V_{CES}	Collector-emitter voltage (V_{BE} = 0)	700		V
V_{CEO}	Collector-emitter voltage (I_B = 0)	400		V
V_{EBO}	Emitter-base voltage (I_C = 0)	$V_{(BR)EBO}$		V
I_C	Collector current	4		A
I_{CM}	Collector peak current (t_P < 5 ms)	8		A
I_B	Base current	2		A
I_{BM}	Base peak current (t_P < 5 ms)	4		A
V_{ISOL}	Insulation withstand voltage (RMS) from all three leads to external heatsink		1500	V
P_{TOT}	Total dissipation at T_c = 25 °C	65	30	W
T_{stg}	Storage temperature	-65 to 150		°C
T_J	Max. operating junction temperature	150		°C

Table 3. Thermal data

Symbol	Parameter	Value		Unit
		TO-220	TO-220FP	
$R_{thJ-case}$	Thermal resistance junction-case max	1.92	4.17	°C/W
$R_{thJ-amb}$	Thermal resistance junction-ambient max	62.5		°C/W

Distributor of STMicroelectronics: Excellent Integrated System Limited
Datasheet of STL128D - TRANS NPN 400V 4A TO-220
Contact us: sales@integrated-circuit.com Website: www.integrated-circuit.com

2 Electrical characteristics

T_{case} = 25 °C unless otherwise specified

Table 4. Electrical characteristics

Symbol	Parameter	Test conditions	Min.	Typ.	Max.	Unit
I_{CES}	Collector cut-off current (V_{BE} = 0)	V_{CE} = 700 V V_{CE} = 700 V T_c = 125 °C			100 500	µA µA
I_{CEO}	Collector cut-off current (I_B = 0)	V_{CE} = 400 V			250	µA
$V_{(BR)EBO}$	Emitter-base breakdown voltage (I_C = 0)	I_E = 10 mA	9		18	V
$V_{CEO(sus)}$(1)	Collector-emitter sustaining voltage (I_B = 0)	I_C = 100 mA	400			V
$V_{CE(sat)}$(1)	Collector-emitter saturation voltage	I_C = 1 A I_B = 0.2 A I_C = 2.5 A I_B = 0.5 A I_C = 3.5 A I_B = 0.7 A		 0.5	1 1.5 	V V V
$V_{BE(sat)}$(1)	Base-emitter saturation voltage	I_C = 1 A I_B = 0.2 A I_C = 2.5 A I_B = 0.5 A			1.2 1.3	V V
h_{FE}(1)	DC current gain	I_C = 10 mA V_{CE} = 5 V I_C = 2 A V_{CE} = 5 V	10 10		 32	
 t_s t_f	Inductive load Storage time Fall time	V_{CC} = 200 V I_C=2 A I_{B1} = 0.4 A $V_{BE(off)}$ = - 5 V R_{BB} = 0 L = 200 µH		 0.6 0.1		 µs µs

1. Pulse test: pulse duration ≤ 300 µs, duty cycle ≤ 1.5 %.

Distributor of STMicroelectronics: Excellent Integrated System Limited
Datasheet of STL128D - TRANS NPN 400V 4A TO-220
Contact us: sales@integrated-circuit.com Website: www.integrated-circuit.com

2.1 Electrical characteristics (curves)

Figure 2. Safe operating area

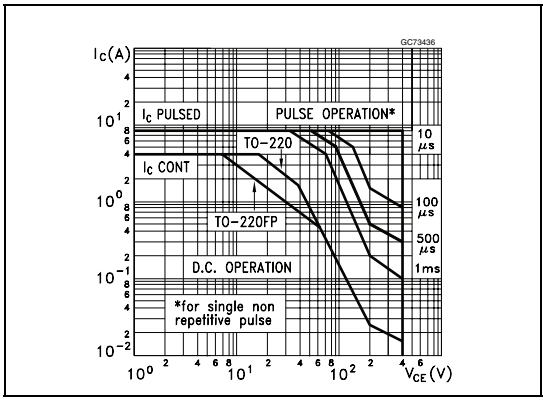

Figure 3. Derating curve

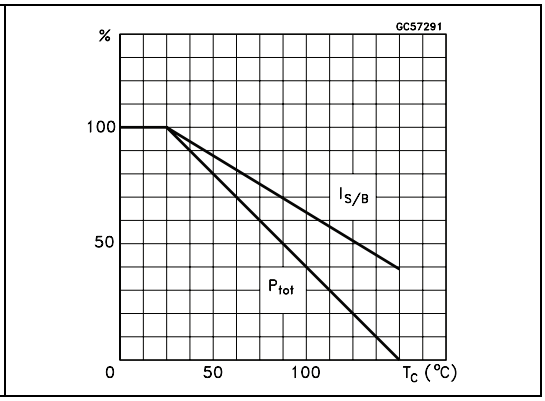

Figure 4. DC current gain (V_{CE} = 1.5 V)

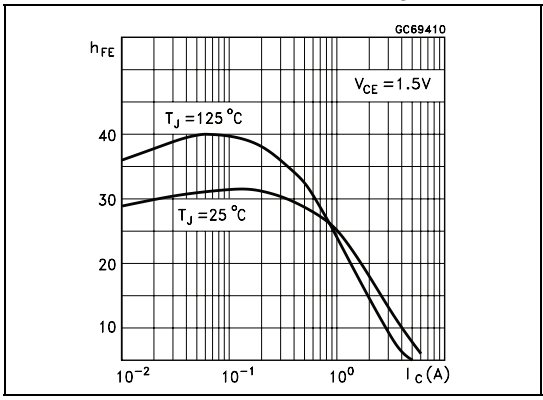

Figure 5. DC current gain (V_{CE} = 5 V)

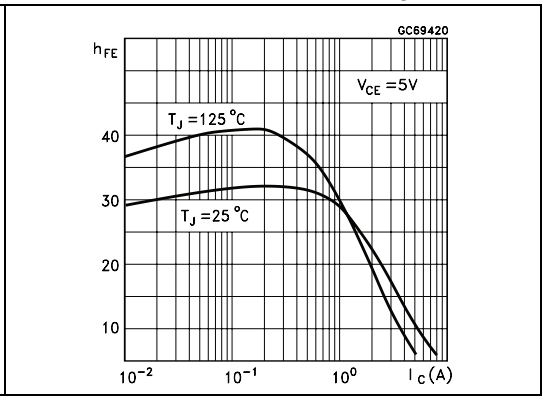

Figure 6. Collector-emitter saturation voltage

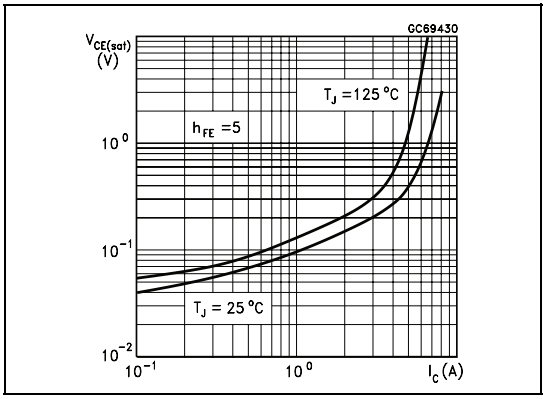

Figure 7. Base-emitter saturation voltage

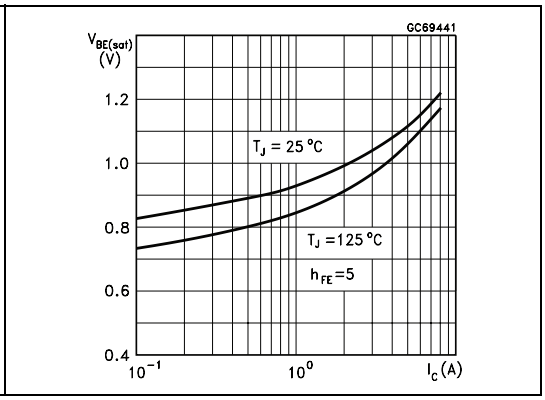

Figure 8. Inductive load fall time

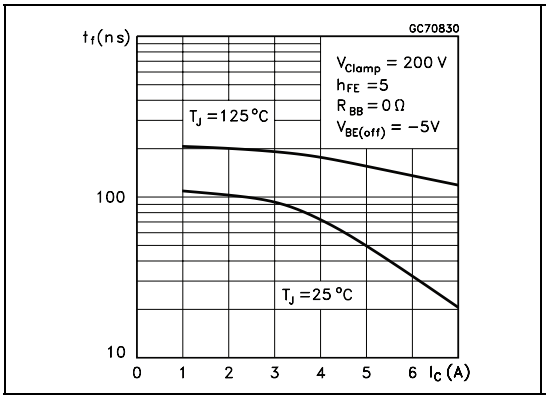

Figure 9. Inductive load storage time

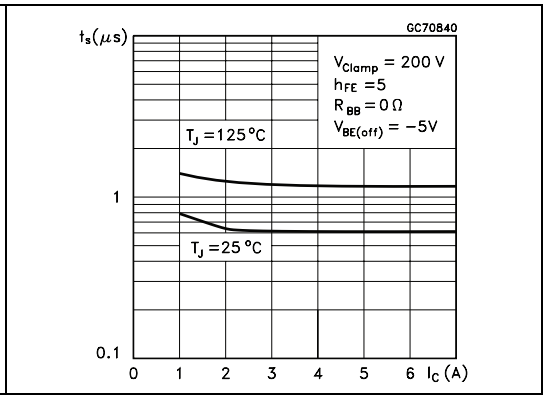

Figure 10. Resistive load fall time

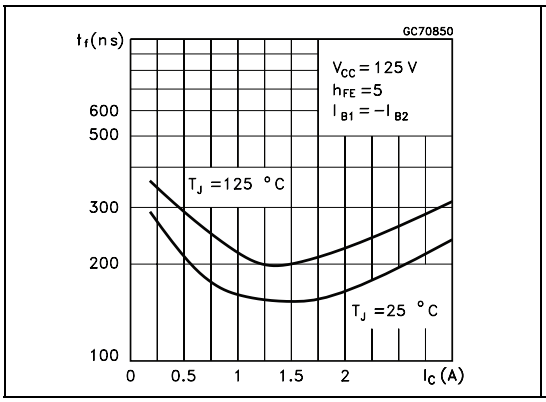

Figure 11. Resistive load storage time

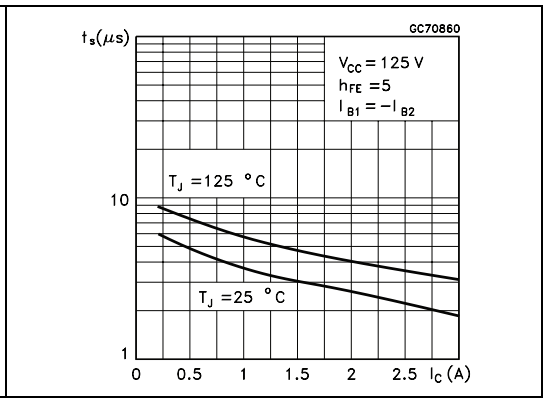

Figure 12. Reverse biased SOA

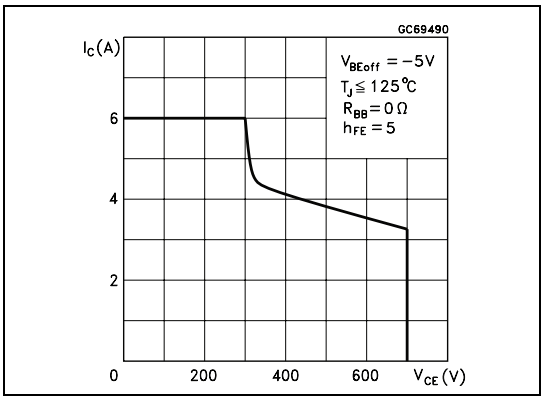

Distributor of STMicroelectronics: Excellent Integrated System Limited
Datasheet of STL128D - TRANS NPN 400V 4A TO-220
Contact us: sales@integrated-circuit.com Website: www.integrated-circuit.com

3 Package mechanical data

In order to meet environmental requirements, ST offers these devices in different grades of ECOPACK® packages, depending on their level of environmental compliance. ECOPACK® specifications, grade definitions and product status are available at: www.st.com. ECOPACK is an ST trademark.

Table 5. TO-220 type A mechanical data

Dim.	mm		
	Min.	Typ.	Max.
A	4.40		4.60
b	0.61		0.88
b1	1.14		1.70
c	0.48		0.70
D	15.25		15.75
D1		1.27	
E	10		10.40
e	2.40		2.70
e1	4.95		5.15
F	1.23		1.32
H1	6.20		6.60
J1	2.40		2.72
L	13		14
L1	3.50		3.93
L20		16.40	
L30		28.90	
∅P	3.75		3.85
Q	2.65		2.95

Figure 13. TO-220 type A drawing

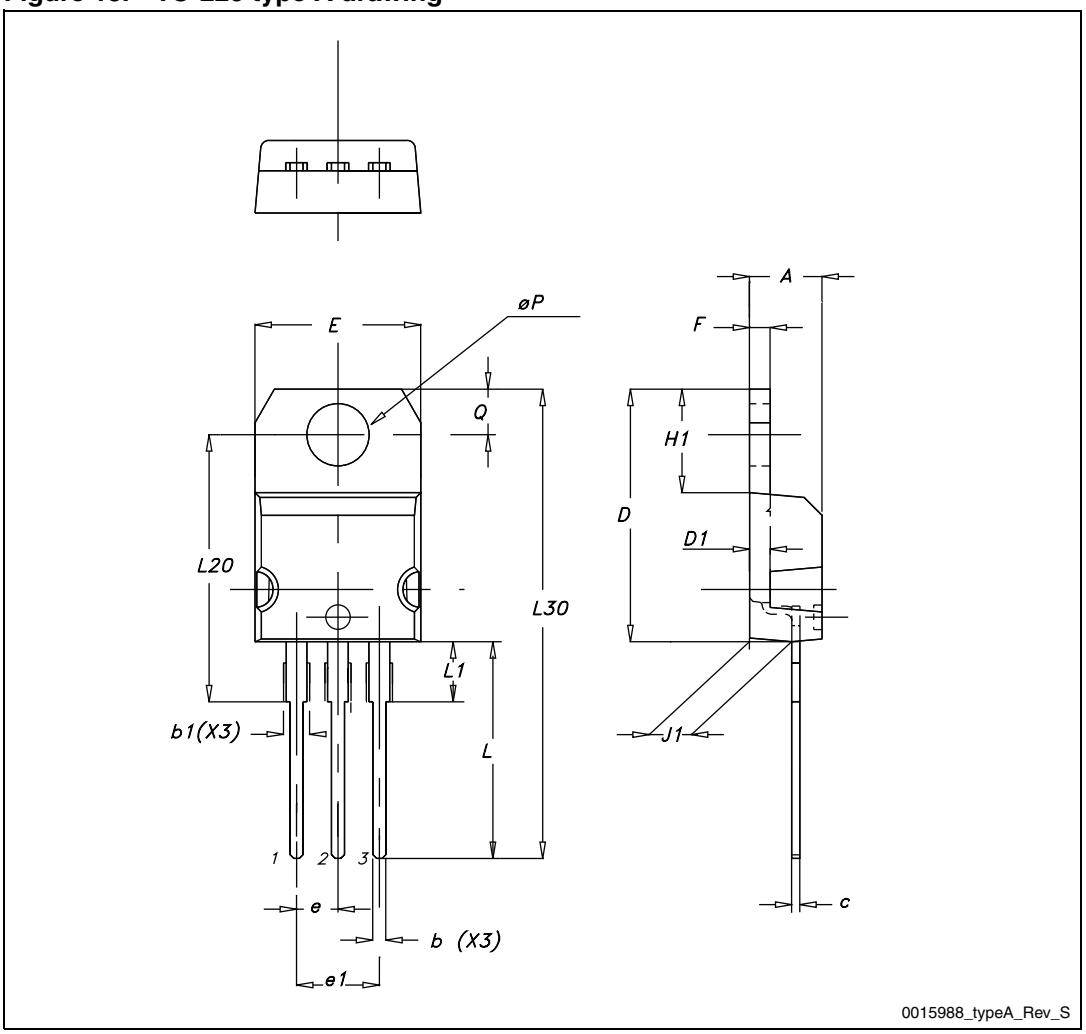

Distributor of STMicroelectronics: Excellent Integrated System Limited
Datasheet of STL128D - TRANS NPN 400V 4A TO-220
Contact us: sales@integrated-circuit.com Website: www.integrated-circuit.com

Table 6. TO-220FP mechanical data

Dim.	mm.		
	Min.	Typ.	Max.
A	4.4		4.6
B	2.5		2.7
D	2.5		2.75
E	0.45		0.7
F	0.75		1
F1	1.15		1.70
F2	1.15		1.70
G	4.95		5.2
G1	2.4		2.7
H	10		10.4
L2		16	
L3	28.6		30.6
L4	9.8		10.6
L5	2.9		3.6
L6	15.9		16.4
L7	9		9.3
Dia	3		3.2

Figure 14. TO-220FP drawing

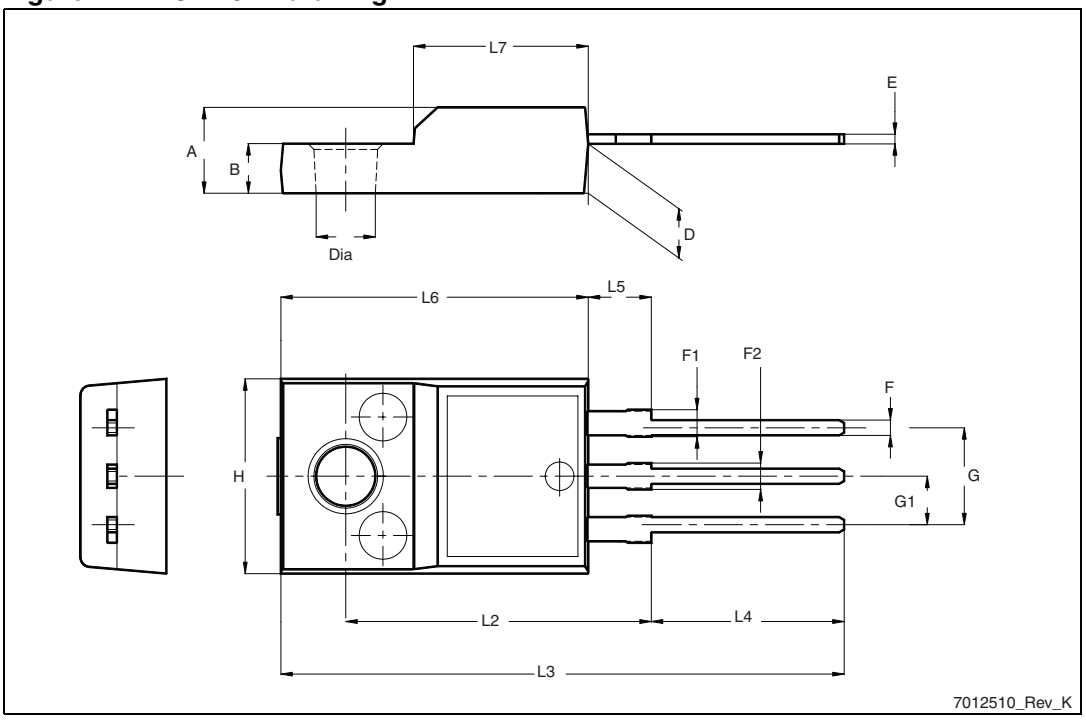

Distributor of STMicroelectronics: Excellent Integrated System Limited
Datasheet of STL128D - TRANS NPN 400V 4A TO-220
Contact us: sales@integrated-circuit.com Website: www.integrated-circuit.com

4 Revision history

Table 7. Document revision history

Date	Revision	Changes
27-Jun-2011	1	First release

Distributor of STMicroelectronics: Excellent Integrated System Limited
Datasheet of STL128D - TRANS NPN 400V 4A TO-220
Contact us: sales@integrated-circuit.com Website: www.integrated-circuit.com

Please Read Carefully:

Information in this document is provided solely in connection with ST products. STMicroelectronics NV and its subsidiaries (“ST”) reserve the right to make changes, corrections, modifications or improvements, to this document, and the products and services described herein at any time, without notice.

All ST products are sold pursuant to ST’s terms and conditions of sale.

Purchasers are solely responsible for the choice, selection and use of the ST products and services described herein, and ST assumes no liability whatsoever relating to the choice, selection or use of the ST products and services described herein.

No license, express or implied, by estoppel or otherwise, to any intellectual property rights is granted under this document. If any part of this document refers to any third party products or services it shall not be deemed a license grant by ST for the use of such third party products or services, or any intellectual property contained therein or considered as a warranty covering the use in any manner whatsoever of such third party products or services or any intellectual property contained therein.

UNLESS OTHERWISE SET FORTH IN ST’S TERMS AND CONDITIONS OF SALE ST DISCLAIMS ANY EXPRESS OR IMPLIED WARRANTY WITH RESPECT TO THE USE AND/OR SALE OF ST PRODUCTS INCLUDING WITHOUT LIMITATION IMPLIED WARRANTIES OF MERCHANTABILITY, FITNESS FOR A PARTICULAR PURPOSE (AND THEIR EQUIVALENTS UNDER THE LAWS OF ANY JURISDICTION), OR INFRINGEMENT OF ANY PATENT, COPYRIGHT OR OTHER INTELLECTUAL PROPERTY RIGHT.

UNLESS EXPRESSLY APPROVED IN WRITING BY AN AUTHORIZED ST REPRESENTATIVE, ST PRODUCTS ARE NOT RECOMMENDED, AUTHORIZED OR WARRANTED FOR USE IN MILITARY, AIR CRAFT, SPACE, LIFE SAVING, OR LIFE SUSTAINING APPLICATIONS, NOR IN PRODUCTS OR SYSTEMS WHERE FAILURE OR MALFUNCTION MAY RESULT IN PERSONAL INJURY, DEATH, OR SEVERE PROPERTY OR ENVIRONMENTAL DAMAGE. ST PRODUCTS WHICH ARE NOT SPECIFIED AS "AUTOMOTIVE GRADE" MAY ONLY BE USED IN AUTOMOTIVE APPLICATIONS AT USER’S OWN RISK.

Resale of ST products with provisions different from the statements and/or technical features set forth in this document shall immediately void any warranty granted by ST for the ST product or service described herein and shall not create or extend in any manner whatsoever, any liability of ST.

ST and the ST logo are trademarks or registered trademarks of ST in various countries.

Information in this document supersedes and replaces all information previously supplied.

The ST logo is a registered trademark of STMicroelectronics. All other names are the property of their respective owners.

© 2011 STMicroelectronics - All rights reserved

STMicroelectronics group of companies

Australia - Belgium - Brazil - Canada - China - Czech Republic - Finland - France - Germany - Hong Kong - India - Israel - Italy - Japan - Malaysia - Malta - Morocco - Philippines - Singapore - Spain - Sweden - Switzerland - United Kingdom - United States of America

www.st.com