Excellent Integrated System Limited

Stocking Distributor

Click to view price, real time Inventory, Delivery & Lifecycle Information:

Molex Connector Corporation
0002098109

For any questions, you can email us directly:
sales@integrated-circuit.com

Distributor of Molex Connector Corporation: Excellent Integrated System Limited
Datasheet of 0002098109 - CONN MALE TERM 14-18AWG
Contact us: sales@integrated-circuit.com Website: www.integrated-circuit.com

PART NO.	ENG. NO.	DIM. "D" DIA.	INSULATION CRIMP PER
02-09-8103	1973-A(P901)	.091±.003/(2.31±0.08)	SECTION "A-A"-1
02-09-8104	1973-A(P901)L		
02-09-8107	1973-1A(105)	.094±.003/(2.39±0.08)	SECTION "A-A"-1
02-09-8108	1973-2A(P901)	.091±.003/(2.31±0.08)	SECTION "A-A"-2
02-09-8109	1973-2A(P901)L		
	-		
	-		
	-		

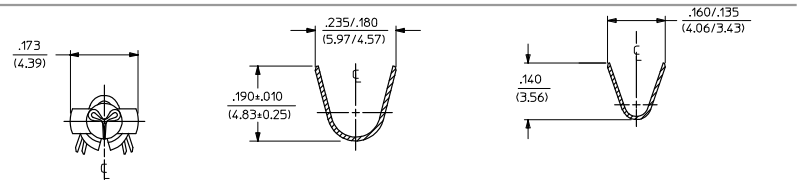

SECTION "A-A"-2
SPECIAL DOUBLE WIRE CRIMP FOR 1973-2 VERSION

SECTION "A-A"-1
STANDARD VERSION FOR 1973 & 1973-1 VERSIONS

LEGEND

1973-*A(****)*

VERSION
BLANK=ORIGINAL
1=MODIFIED PIN DIA.
2=LARGER INSUL. CRIMP

P=PREPLATE
BLANK=POSTPLATE

FORM
BLANK=CHAIN
L=LOOSE

FINISH CODE

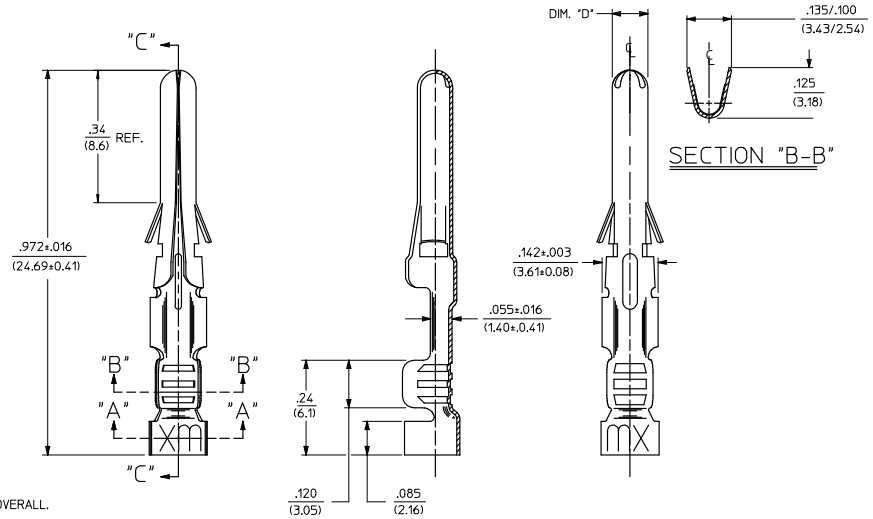

SECTION "B-B"

SECTION "C-C"

NOTES:

1. MATERIAL: CARTRIDGR BRASS ALLOY, .010/(0.25) THICK.
2. FINISHES:
   105 TIN PLATE .000300/(0.00762) MIN. OVER .000100/(0.00254) MIN. COPPER OVERALL.
   901 HOT TIN DIP .000020/(0.00051) MIN.
   * THE PRIMARY SHIPPING CARTON WILL BE LABELED, "COMPLIANT TO RoHS DIRECTIVE 2002/95/EC AND ANNEX II OF DIRECTIVE 2000/53/EC", AND CARTONS WITHOUT THIS' LABEL MAY CONTAIN PRODUCT WITH TIN-LEAD.
3. PACKAGING INFORMATION: NOT AVAILABLE
4. TERMINALS FOR USE WITH .093/(2.36) SERIES HOUSINGS. 1973 & 1973-1 VERSIONS WILL ACCEPT 18 THRU 22 AWG WIRE. 1973-2 VERSION IS FOR USE WITH 14 THRU 18 AWG WIRE AND DOUBLE CRIMPS OF ONE 16 AND ONE 18 AWG OR TWO 18 AWG WIRES.
5. INSERTION FORCE: 3.5 LBS. MAX. WHEN TERMINAL IS INSERTED INTO .124/(3.15) DIA. CORE HOLE.
6. CONTACT RETENTION: 20 LBS. MIN.
7. FLOAT: TERMINAL MAY ROTATE IN HOUSING, BUT SHOULD NOT SPIN FREELY WHEN WIRE IS ROLLED BETWEEN FINGERS.

REV	DESCRIPTION	
D1	REVISE NOTE 2	
	EC NO: UCP2009-0059	2008/07/08
	DRWN:GANEVRILL	2008/07/10
	CHKD:BELL	2008/07/10
	APPR:FSMITH	

QUALITY SYMBOLS
▼=0
▽=0

GENERAL TOLERANCES (UNLESS SPECIFIED)

	mm	INCH
4 PLACES	± ---	± ---
3 PLACES	± ---	± .010
2 PLACES	± 0.25	± .014
1 PLACE	± 0.35	±
ANGULAR ±1/2°		

DRAFT WHERE APPLICABLE MUST REMAIN WITHIN DIMENSIONS

DIMENSION STYLE: IN/MM
SCALE: 6:1
DESIGN UNITS: INCH
THIRD ANGLE PROJECTION

		DATE
DRAWN BY	GWC	1992/06/17
CHECKED BY	RW	1992/06/17
APPROVED BY	GWF	1992/06/17

TITLE: CRIMP TERMINAL, MALE, GROUND PIN, .093 DIA., FOR VARIOUS WIRE SIZES

molex MOLEX INCORPORATED

MATERIAL NO.: SEE CHART
DOCUMENT NO.: SD-1973-*
SHEET NO.: 1 OF 1
SIZE: C

THIS DRAWING CONTAINS INFORMATION THAT IS PROPRIETARY TO MOLEX INCORPORATED AND SHOULD NOT BE USED WITHOUT WRITTEN PERMISSION

tb_frame_C_P_ME_T
Rev. D 2004/04/02