Excellent Integrated System Limited

Stocking Distributor

Click to view price, real time Inventory, Delivery & Lifecycle Information:

Molex Connector Corporation
0009571175

For any questions, you can email us directly:
sales@integrated-circuit.com

Distributor of Molex Connector Corporation: Excellent Integrated System Limited
Datasheet of 0009571175 - CONN HEADER VERT 17POS TIN
Contact us: sales@integrated-circuit.com Website: www.integrated-circuit.com

NO. OF CKTS.	DIM. A MAX.	DIM. B REF.	DIM. C
2	(7.37) .290	(3.96) .156	(7.67) .302
3	(11.33) .446	(7.92) .312	(11.63) .458
4	(15.29) .602	(11.89) .468	(15.60) .614
5	(19.25) .758	(15.85) .624	(19.56) .770
6	(23.22) .914	(19.81) .780	(23.52) .926
7	(27.18) 1.070	(23.77) .936	(27.48) 1.080
8	(31.14) 1.226	(27.74) 1.092	(31.45) 1.238
9	(35.10) 1.382	(31.70) 1.248	(35.41) 1.394
10	(39.07) 1.538	(35.66) 1.404	(39.37) 1.550
11	(43.03) 1.694	(39.62) 1.560	(43.33) 1.706
12	(46.99) 1.850	(43.59) 1.716	(47.29) 1.862
13	(50.95) 2.006	(47.55) 1.872	(51.26) 2.018
14	(54.91) 2.162	(51.51) 2.028	(55.22) 2.174
15	(58.88) 2.318	(55.47) 2.184	(59.18) 2.330
16	(62.84) 2.474	(59.44) 2.340	(63.14) 2.486
17	(66.80) 2.630	(63.40) 2.496	(67.11) 2.642
18	(70.76) 2.786	(67.36) 2.652	(71.07) 2.798
19	(74.65) 2.939	(71.32) 2.808	(74.96) 2.951
20	(78.61) 3.095	(75.29) 2.964	(78.92) 3.107

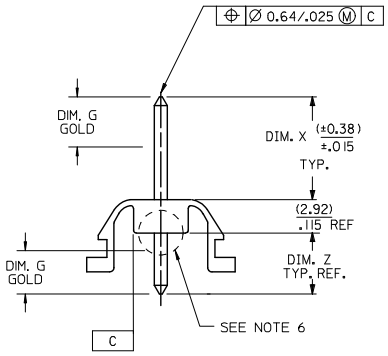

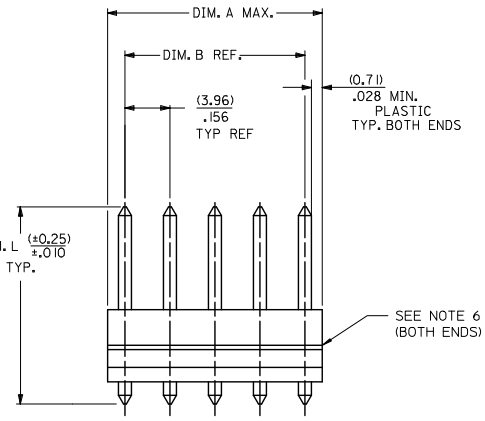

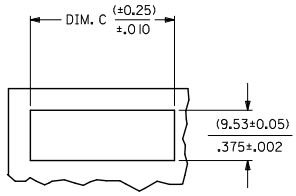

PANEL OPENNING
(1.57±.03) / .062±.001 THK.

PARTS MUST SNAP INTO ABOVE PCB

A-2220-N * * *

NO. OF CKTS.

PACKAGING
BLANK = PER PK-2220-002
A = PER PK-44646-005

VERSION
LETTER CHANGES WHEN
PIN NO. OR PRESS
DIM. CHANGES

PLATING CODE
SEE NOTE 2

NOTES:

1. MATERIAL: UNFILLED NYLON 6/6, UL94V-2, MOLDED NATURAL.
2. FINISH: SEE LEGEND
   (197) - OVERALL REFLOWED MATTE TIN: 0.00152/.000060 MIN.
   OVER 0.00127/.000050 MIN. NICKEL
   (502) - SELECT GOLD: 0.00051/.000020 MIN.
   OVERALL NICKEL UNDERPLATE: 0.00127/.000050 MIN.
3. PARTS CONFORM TO PRODUCT SPECIFICATION PS-08-50.
4. PACKAGING INFORMATION: SEE LEGEND.
5. PIN PUSHOUT FORCE: PRIOR TO SOLDERING. A 3 POUND MINIMUM FORCE (IN EITHER DIRECTION) SHALL BE REQUIRED TO PUSH THE PIN OUT OF THE HEADER.
6 THIS PART CONFORMS TO CLASS C REQUIREMENTS OF COSMETIC SPECIFICATION PS-45499-002. BURRS OR PROTRUSIONS ON HOUSING ARE ALLOWED IN PIN INSERTION AREA AND ON ENDS OF PART IF WITHIN DIMENSION A.

REV	DESCRIPTION	DRWN	CHK'D	APPR	DATE
S1	ADD NOTE 6 EC NO: UCP2013-1310	KIPPER	SOUSEK	FSMITH	2012/10/02 2012/10/02 2012/10/09

QUALITY SYMBOLS: =0, =1, =0

GENERAL TOLERANCES (UNLESS SPECIFIED)

	mm	INCH
4 PLACES	± ---	± ---
3 PLACES	± ---	± ---
2 PLACES	± ---	± ---
1 PLACE	± ---	± ---
0 PLACE	±	±
ANGULAR ±1/2°		

DRAFT WHERE APPLICABLE MUST REMAIN WITHIN DIMENSIONS

DIMENSION STYLE: MM/IN
SCALE: ---
DESIGN UNITS: INCH
THIRD ANGLE PROJECTION

DRAWN BY: KSS DATE: 1984/10/30
CHECKED BY: DMS DATE: 1984/10/30
APPROVED BY: FSMITH DATE: 2012/01/06

TITLE: WAFER ASSEMBLY CHASSIS MOUNT, KK 2220 SERIES DWG.

molex

MATERIAL NO.: SEE CHART
DOCUMENT NO.: SDA-2220
SHEET NO.: 1 OF 2
SIZE: C

THIS DRAWING CONTAINS INFORMATION THAT IS PROPRIETARY TO MOLEX INCORPORATED AND SHOULD NOT BE USED WITHOUT WRITTEN PERMISSION

tb_frame_C_P_AM_T
Rev. G 2012/01/11

Distributor of Molex Connector Corporation: Excellent Integrated System Limited
Datasheet of 0009571175 - CONN HEADER VERT 17POS TIN
Contact us: sales@integrated-circuit.com Website: www.integrated-circuit.com

ENG. NO.	PIN NO.	DIM. L	DIM. X	DIM. Z	DIM. G TYP BOTH ENDS
A-2220-NA197	43294-0832	(35.05) / 1.380	(16.00) / .630	(16.13) / .635	N/A
A-2220-NA502	43294-0833	(35.05) / 1.380	(16.00) / .630	(16.13) / .635	(6.85) / .270
A-2220-NAB502	43294-1100	(42.42) / 1.670	(16.89) / .665	(22.61) / .890	(7.62) / .300
A-2220-NB197	43294-1147	(44.45) / 1.750	(18.24) / .718	(23.29) / .917	N/A

A-2220-NA197		A-2220-NA502		A-2220-NAB502		A-2220-NB197	
PART NO.	ENG. NO.	PART NO.	ENG. NO.	PART NO.	ENG. NO.	PART NO.	ENG. NO.
09-57-1025	A-2220-2A197	09-78-1021	A-2220-2A502		A-2220-2AB502	09-57-1026	A-2220-2B197
09-57-1035	A-2220-3A197	09-78-1031	A-2220-3A502		A-2220-3AB502	09-57-1036	A-2220-3B197
09-57-1045	A-2220-4A197	09-78-1041	A-2220-4A502		A-2220-4AB502	09-57-1046	A-2220-4B197
09-57-1055	A-2220-5A197	09-78-1051	A-2220-5A502		A-2220-5AB502	09-57-1056	A-2220-5B197
09-57-1065	A-2220-6A197	09-78-1061	A-2220-6A502	09-78-1067	A-2220-6AB502	09-57-1066	A-2220-6B197
09-57-1075	A-2220-7A197	09-78-1071	A-2220-7A502		A-2220-7AB502	09-57-1076	A-2220-7B197
09-57-1085	A-2220-8A197	09-78-1081	A-2220-8A502	09-78-1087	A-2220-8AB502	09-57-1086	A-2220-8B197
09-57-1095	A-2220-9A197	09-78-1091	A-2220-9A502		A-2220-9AB502	09-57-1096	A-2220-9B197
09-57-1105	A-2220-10A197	09-78-1101	A-2220-10A502	09-78-1107	A-2220-10AB502	09-57-1106	A-2220-10B197
09-57-1115	A-2220-11A197	09-78-1111	A-2220-11A502		A-2220-11AB502	09-57-1116	A-2220-11B197
09-57-1125	A-2220-12A197	09-78-1121	A-2220-12A502	09-78-1127	A-2220-12AB502	09-57-1126	A-2220-12B197
09-57-1135	A-2220-13A197	09-78-1131	A-2220-13A502		A-2220-13AB502	09-57-1136	A-2220-13B197
09-57-1145	A-2220-14A197	09-78-1141	A-2220-14A502		A-2220-14AB502	09-57-1146	A-2220-14B197
09-57-1155	A-2220-15A197	09-78-1151	A-2220-15A502	09-78-1157	A-2220-15AB502	09-57-1156	A-2220-15B197
09-57-1165	A-2220-16A197	09-78-1161	A-2220-16A502		A-2220-16AB502	09-57-1166	A-2220-16B197
09-57-1175	A-2220-17A197	09-78-1171	A-2220-17A502		A-2220-17AB502	09-57-1176	A-2220-17B197
09-57-1185	A-2220-18A197	09-78-1181	A-2220-18A502		A-2220-18AB502	09-57-1186	A-2220-18B197

ADD PN CHART
EC NO: UCP2013-1310 2012/10/02
DRWN:MKIPPER 2012/10/02
CHKD:SSOUSEK 2012/10/02
APPR:FSMITH 2012/10/09
DESCRIPTION
REV S1

QUALITY SYMBOLS
=0
=0
=0

GENERAL TOLERANCES (UNLESS SPECIFIED)

	mm	INCH
4 PLACES	± ---	± ---
3 PLACES	± ---	± ---
2 PLACES	± ---	± ---
1 PLACE	± ---	± ---
0 PLACE	±	±

ANGULAR ±1/2°
DRAFT WHERE APPLICABLE MUST REMAIN WITHIN DIMENSIONS

DIMENSION STYLE: MM/IN
SCALE: ---
DESIGN UNITS: INCH
THIRD ANGLE PROJECTION

DRAWN BY: KSS DATE: 1984/10/30
CHECKED BY: DMS DATE: 1984/10/30
APPROVED BY: FSMITH DATE: 2012/01/06

TITLE: WAFER ASSEMBLY CHASSIS MOUNT, KK 2220 SERIES DWG.

molex

MATERIAL NO.: SEE CHART
DOCUMENT NO.: SDA-2220
SHEET NO.: 2 OF 2
SIZE: C

THIS DRAWING CONTAINS INFORMATION THAT IS PROPRIETARY TO MOLEX INCORPORATED AND SHOULD NOT BE USED WITHOUT WRITTEN PERMISSION

tb_frame_C_P_AM_T
Rev. G 2012/01/11