Excellent Integrated System Limited

Stocking Distributor

Click to view price, real time Inventory, Delivery & Lifecycle Information:

Molex Connector Corporation
0015454620

For any questions, you can email us directly:
sales@integrated-circuit.com

Distributor of Molex Connector Corporation: Excellent Integrated System Limited
Datasheet of 0015454620 - Connector Receptacle 20 Position 0.100" (2.54mm) Gold Surface Mount
Contact us: sales@integrated-circuit.com Website: www.integrated-circuit.com

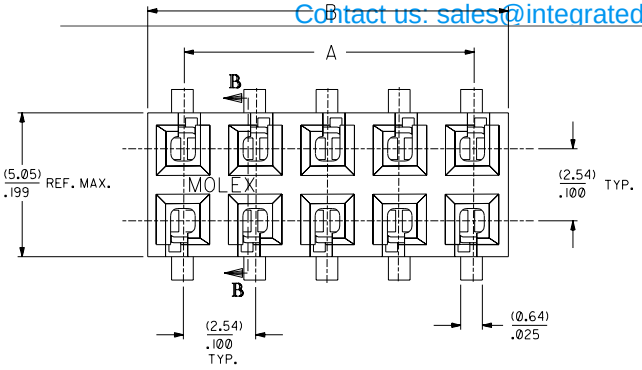

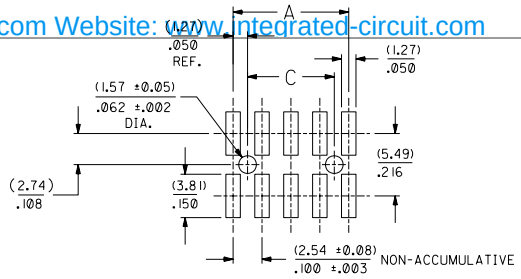

RECOMMENDED P.C. BOARD LAYOUT
SCALE: 4:1

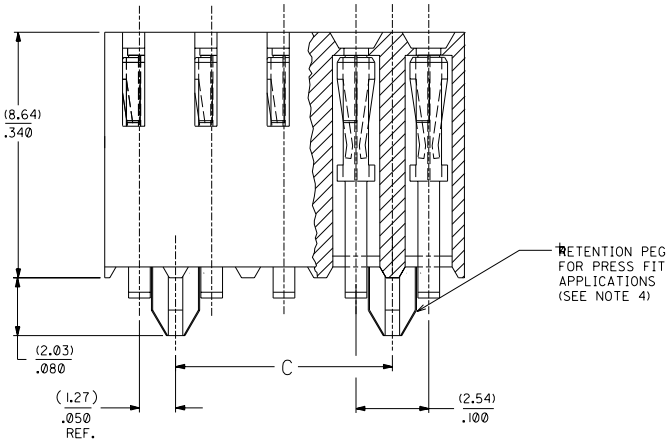

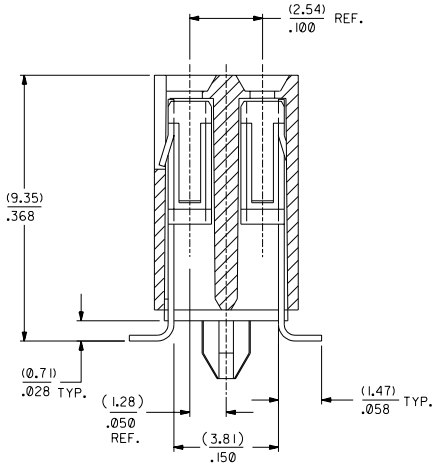

SECTION **B-B**

NOTES:

1 - HOUSING MATERIAL: GLASS FILLED LIQUID CRYSTAL POLYMER; UL 94V-0.
COLOR: BLACK
2 - TERMINAL MATERIAL: PHOSPHOR BRONZE
3 - SEE SHEET 2 FOR CIRCUIT SIZES AND OVER-ALL DIMENSIONS.
4 - SEE PRODUCT SPEC. PS-71395 FOR PERFORMANCE CRITERIA.
5 - STANDARD PACKAGING PER PK-70873-0662 (TRAY PACK)
6 - A-71395-5020, A-71395-5120, AND A-71395-5220 TO BE PACKED IN TAPE AND REEL PER PK-71395-001.

- VERSION WITH SHORTENED PCB RETENTION PEGS -

LTR.	REVISIONS
F	LEAD FREE UCP2004-1770 RWHITE 04/04/28
E	ADD TAPE AND REEL ECN# UCP2004-10481 BSMART 12/08/03
D	CHG PACK SPEC ECN# UDT2000-0691 DMORGAN 00/03/16
C1	REVISED PEG NOTE PER ECR # U60219 95/08/22 CAC
C	REV PLATE & BOX U30572 09/20/93 MURPHY
B1	ADD EDP 3008/3080 PER ECR# U30565 4/14/93 BRINKMAN
B	REV. AND REL EDP'S PER ECR U2 0304 02/25/92 MURPHY
A	RELEASE PER ECR U1 1816 09/03/91 MURPHY

MFG. SH. REV.

REVISE ONLY ON CAD SYSTEM

DIMENSIONS SHOWN (METRIC) INCH
UNLESS OTHERWISE SPECIFIED TOLERANCES: ANGULAR ± 1/2°

	INCH	METRIC
3 PLACE	± .010	---
2 PLACE	± .014	±(0.25)
1 PLACE	---	±(0.35)

DRAFT WHERE APPLICABLE MUST REMAIN WITHIN DIMENSIONS

DRWG. BY
CHK'D. BY R B
APP'D. BY
SCALE 10:1

TITLE
CONNECTOR
DUAL ROW VERTICAL SURFACE MOUNT
TOP ENTRY ON .100 GRID

MOLEX INCORPORATED
LISLE, ILL. 60532 U.S.A.
SHEET NO. 1 OF 2
DATE 12/03/85
PART NO.
DRWG. NO. SDA-71395-3***
FILE NAME SH71395X4 DGN
THIS DRAWING CONTAINS INFORMATION THAT IS PROPRIETARY TO MOLEX INC. AND SHOULD NOT BE USED WITHOUT WRITTEN PERMISSION.
DIV. TC
SIZE C

Distributor of Molex Connector Corporation: Excellent Integrated System Limited
Datasheet of 0015454620 - Connector Receptacle 20 Position 0.100" (2.54mm) Gold Surface Mount
Contact us: sales@integrated-circuit.com Website: www.integrated-circuit.com

71395

NO. OF CKTS.		TIN PLATING			15 GOLD PLATING			30 GOLD PLATING										
PER ROW	TOTAL	E.D.P. NO.	ENG. NO.	STANDARD PACKAGING	E.D.P. NO.	ENG. NO.	STANDARD PACKAGING	E.D.P. NO.	ENG. NO.	STANDARD PACKAGING	DIM. "A" INCH	DIM. "A" MM	DIM. "B" INCH	DIM. "B" MM	DIM. "C" INCH	DIM. "C" MM
4	8	15-45-3908	A-71395-3008	PK-70873-0662	15-45-3808	A-71395-3108	PK-70873-0662	15-45-4608	A-71395-3208	PK-70873-0662	.300	7,62	.399	10,13	.200	5,08
5	10	15-45-3910	A-71395-3010	PK-70873-0662	15-45-3810	A-71395-3110	PK-70873-0662	15-45-4610	A-71395-3210	PK-70873-0662	.400	10,16	.499	12,67	.300	7,62
6	12	15-45-3912	A-71395-3012	PK-70873-0662	15-45-3812	A-71395-3112	PK-70873-0662	15-45-4612	A-71395-3212	PK-70873-0662	.500	12,70	.599	15,21	.400	10,16
7	14	15-45-3914	A-71395-3014	PK-70873-0662	15-45-3814	A-71395-3114	PK-70873-0662	15-45-4614	A-71395-3214	PK-70873-0662	.600	15,24	.699	17,75	.500	12,70
8	16	15-45-3916	A-71395-3016	PK-70873-0662	15-45-3816	A-71395-3116	PK-70873-0662	15-45-4616	A-71395-3216	PK-70873-0662	.700	17,78	.799	20,29	.600	15,24
9	18	15-45-3918	A-71395-3018	PK-70873-0662	15-45-3818	A-71395-3118	PK-70873-0662	15-45-4618	A-71395-3218	PK-70873-0662	.800	20,32	.899	22,83	.700	17,78
10	20	15-45-3920	A-71395-3020	PK-70873-0662	15-45-3820	A-71395-3120	PK-70873-0662	15-45-4620	A-71395-3220	PK-70873-0662	.900	22,86	.999	25,37	.800	20,32
11	22	15-45-3922	A-71395-3022	PK-70873-0662	15-45-3822	A-71395-3122	PK-70873-0662	15-45-4622	A-71395-3222	PK-70873-0662	1.000	25,40	1.099	27,91	.900	22,86
12	24	15-45-3924	A-71395-3024	PK-70873-0662	15-45-3824	A-71395-3124	PK-70873-0662	15-45-4624	A-71395-3224	PK-70873-0662	1.100	27,94	1.199	30,45	1.000	25,40
13	26	15-45-3926	A-71395-3026	PK-70873-0662	15-45-3826	A-71395-3126	PK-70873-0662	15-45-4626	A-71395-3226	PK-70873-0662	1.200	30,48	1.299	32,99	1.100	27,94
14	28	15-45-3928	A-71395-3028	PK-70873-0662	15-45-3828	A-71395-3128	PK-70873-0662	15-45-4628	A-71395-3228	PK-70873-0662	1.300	33,02	1.399	35,53	1.200	30,48
15	30	15-45-3930	A-71395-3030	PK-70873-0662	15-45-3830	A-71395-3130	PK-70873-0662	15-45-4630	A-71395-3230	PK-70873-0662	1.400	35,56	1.499	38,07	1.300	33,02
16	32	15-45-3932	A-71395-3032	PK-70873-0662	15-45-3832	A-71395-3132	PK-70873-0662	15-45-4632	A-71395-3232	PK-70873-0662	1.500	38,10	1.599	40,61	1.400	35,56
17	34	15-45-3934	A-71395-3034	PK-70873-0662	15-45-3834	A-71395-3134	PK-70873-0662	15-45-4634	A-71395-3234	PK-70873-0662	1.600	40,64	1.699	43,15	1.500	38,10
18	36	15-45-3936	A-71395-3036	PK-70873-0662	15-45-3836	A-71395-3136	PK-70873-0662	15-45-4636	A-71395-3236	PK-70873-0662	1.700	43,18	1.799	45,69	1.600	40,64
19	38	15-45-3938	A-71395-3038	PK-70873-0662	15-45-3838	A-71395-3138	PK-70873-0662	15-45-4638	A-71395-3238	PK-70873-0662	1.800	45,72	1.899	48,23	1.700	43,18
20	40	15-45-3940	A-71395-3040	PK-70873-0662	15-45-3840	A-71395-3140	PK-70873-0662	15-45-4640	A-71395-3240	PK-70873-0662	1.900	48,26	1.999	50,77	1.800	45,72
21	42	15-45-3942	A-71395-3042	PK-70873-0662	15-45-3842	A-71395-3142	PK-70873-0662	15-45-4642	A-71395-3242	PK-70873-0662	2.000	50,80	2.099	53,31	1.900	48,26
22	44	15-45-3944	A-71395-3044	PK-70873-0662	15-45-3844	A-71395-3144	PK-70873-0662	15-45-4644	A-71395-3244	PK-70873-0662	2.100	53,34	2.199	55,85	2.000	50,80
23	46	15-45-3946	A-71395-3046	PK-70873-0662	15-45-3846	A-71395-3146	PK-70873-0662	15-45-4646	A-71395-3246	PK-70873-0662	2.200	55,88	2.299	58,39	2.100	53,34
24	48	15-45-3948	A-71395-3048	PK-70873-0662	15-45-3848	A-71395-3148	PK-70873-0662	15-45-4648	A-71395-3248	PK-70873-0662	2.300	58,42	2.399	60,93	2.200	55,88
25	50	15-45-3950	A-71395-3050	PK-70873-0662	15-45-3850	A-71395-3150	PK-70873-0662	15-45-4650	A-71395-3250	PK-70873-0662	2.400	60,96	2.499	63,47	2.300	58,42
26	52	15-45-3952	A-71395-3052	PK-70873-0662	15-45-3852	A-71395-3152	PK-70873-0662	15-45-4652	A-71395-3252	PK-70873-0662	2.500	63,50	2.599	66,01	2.400	60,96
27	54	15-45-3954	A-71395-3054	PK-70873-0662	15-45-3854	A-71395-3154	PK-70873-0662	15-45-4654	A-71395-3254	PK-70873-0662	2.600	66,04	2.699	68,55	2.500	63,50
28	56	15-45-3956	A-71395-3056	PK-70873-0662	15-45-3856	A-71395-3156	PK-70873-0662	15-45-4656	A-71395-3256	PK-70873-0662	2.700	68,58	2.799	71,09	2.600	66,04
29	58	15-45-3958	A-71395-3058	PK-70873-0662	15-45-3858	A-71395-3158	PK-70873-0662	15-45-4658	A-71395-3258	PK-70873-0662	2.800	71,12	2.899	73,63	2.700	68,58
30	60	15-45-3960	A-71395-3060	PK-70873-0662	15-45-3860	A-71395-3160	PK-70873-0662	15-45-4660	A-71395-3260	PK-70873-0662	2.900	73,66	2.999	76,17	2.800	71,12
31	62	15-45-3962	A-71395-3062	PK-70873-0662	15-45-3862	A-71395-3162	PK-70873-0662	15-45-4662	A-71395-3262	PK-70873-0662	3.000	76,20	3.099	78,71	2.900	73,66
32	64	15-45-3964	A-71395-3064	PK-70873-0662	15-45-3864	A-71395-3TIN	PK-70873-0662	15-45-4664	A-71395-3264	PK-70873-0662	3.100	78,74	3.199	81,25	3.000	76,20
33	66	15-45-3966	A-71395-3066	PK-70873-0662	15-45-3866	A-71395-3166	PK-70873-0662	15-45-4666	A-71395-3266	PK-70873-0662	3.200	81,28	3.299	83,79	3.100	78,74
34	68	15-45-3968	A-71395-3068	PK-70873-0662	15-45-3868	A-71395-3168	PK-70873-0662	15-45-4668	A-71395-3268	PK-70873-0662	3.300	83,82	3.399	86,33	3.200	81,28
35	70	15-45-3970	A-71395-3070	PK-70873-0662	15-45-3870	A-71395-3170	PK-70873-0662	15-45-4670	A-71395-3270	PK-70873-0662	3.400	86,36	3.499	88,87	3.300	83,82
36	72	15-45-3972	A-71395-3072	PK-70873-0662	15-45-3872	A-71395-3172	PK-70873-0662	15-45-4672	A-71395-3272	PK-70873-0662	3.500	88,90	3.599	91,41	3.400	86,36
37	74	15-45-3974	A-71395-3074	PK-70873-0662	15-45-3874	A-71395-3174	PK-70873-0662	15-45-4674	A-71395-3274	PK-70873-0662	3.600	91,44	3.699	93,95	3.500	88,90
38	76	15-45-3976	A-71395-3076	PK-70873-0662	15-45-3876	A-71395-3176	PK-70873-0662	15-45-4676	A-71395-3276	PK-70873-0662	3.700	93,98	3.799	96,49	3.600	91,44
39	78	15-45-3978	A-71395-3078	PK-70873-0662	15-45-3878	A-71395-3178	PK-70873-0662	15-45-4678	A-71395-3278	PK-70873-0662	3.800	96,52	3.899	99,03	3.700	93,98
40	80	15-45-3980	A-71395-3080	PK-70873-0662	15-45-3880	A-71395-3180	PK-70873-0662	15-45-4680	A-71395-3280	PK-70873-0662	3.900	99,06	3.999	101,57	3.800	96,52

71395

NO. OF CKTS.		TIN PLATING			15 GOLD PLATING			30 GOLD PLATING								
PER ROW	TOTAL	E.D.P. NO.	ENG. NO.	TAPE AND REEL PACKAGING	E.D.P. NO.	ENG. NO.	TAPE AND REEL PACKAGING	E.D.P. NO.	ENG. NO.	TAPE AND REEL PACKAGING	DIM. "A" INCH	DIM. "A" MM	DIM. "B" INCH	DIM. "B" MM	INCH	MM
7	14	NA	NA	NA	NA	NA	NA	71395-4014	A-71395-4014	PK-71395-001	.600	15,24	.699	17,75	.500	12,70

*THE PRIMARY SHIPPING CARTON WILL BE LABELED "COMPLIANT TO RoHS DIRECTIVE 2002/95/EC AND ELV ANNEX II OF DIRECTIVE 2000/53/EC". CARTONS WITHOUT THIS LABEL MAY CONTAIN PRODUCT WITH LEAD.

- VERSION WITH SHORTENED PCB RETENTION PEGS -

PLATING:

TIN (3.75 MICROMETER)/150 MICROINCH MINIMUM TIN OVER
(1.25 MICROMETER)/50 MICROINCH MINIMUM NICKEL OVERALL.

15 GOLD (0.37 MICROMETER)/15 MICROINCH MINIMUM SELECTIVE GOLD IN THE CONTACT AREA;
(1.88 MICROMETER)/75 MICROINCH MINIMUM SELECTIVE TIN IN THE PC TAIL AREA OVER
(1.25 MICROMETER)/50 MICROINCH MINIMUM NICKEL OVERALL.

30 GOLD (0.75 MICROMETER)/30 MICROINCH MINIMUM SELECTIVE GOLD IN THE CONTACT AREA;
(1.88 MICROMETER)/75 MICROINCH MINIMUM SELECTIVE TIN IN THE PC TAIL AREA OVER
(1.25 MICROMETER)/50 MICROINCH MINIMUM NICKEL OVERALL.

LTR.	REVISIONS	LTR.	REVISIONS
		F	SEE SHEET 1
		E	SEE SHEET 1
		D	SEE SHEET 1
		C	SEE SHEET 1

DIMENSIONS SHOWN (METRIC) INCH
UNLESS OTHERWISE SPECIFIED TOLERANCES: ANGULAR ± 1/2°

	INCH	METRIC
3 PLACE	± ---	---
2 PLACE	± ---	± ---
1 PLACE	---	± ---

DRAFT WHERE APPLICABLE MUST REMAIN WITHIN DIMENSIONS

DRWG. BY PM | CHK'D. BY PM | APP'D. BY | SCALE :

▽ = 0 ▼ = 0 REVISE ONLY ON CAD SYSTEM

TITLE CONNECTOR ASSEMBLY
DUAL ROW VERTICAL SURFACE MOUNT
TOP ENTRY ON .100 GRID

MOLEX INCORPORATED
LISLE, ILL. 60532 U.S.A.

SHEET NO. 2 | DATE 09/03/91

PART NO. SEE CHART | DRWG. NO. SDA-71395-3***

FILE NAME SC71395X3

THIS DRAWING CONTAINS INFORMATION THAT IS PROPRIETARY TO MOLEX INC. AND SHOULD NOT BE USED WITHOUT WRITTEN PERMISSION

DIV. DC | SIZE C