Excellent Integrated System Limited

Stocking Distributor

Click to view price, real time Inventory, Delivery & Lifecycle Information:

Molex Connector Corporation
0026645072

For any questions, you can email us directly:
sales@integrated-circuit.com

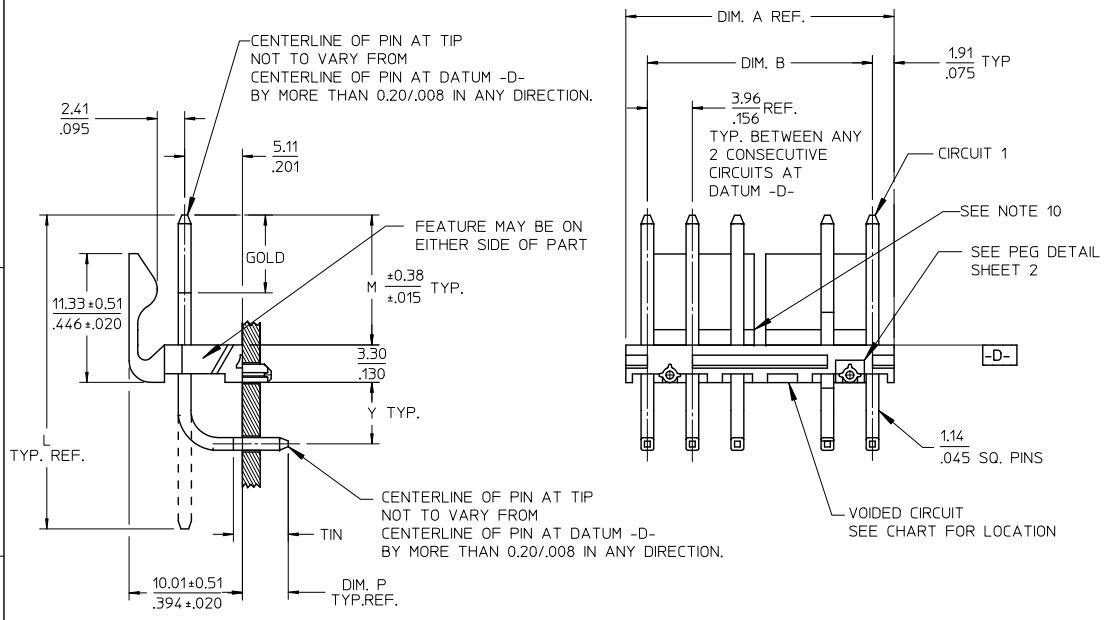

NO. OF CKTS.	DIM. A	DIM. B	SLOT LOC BETWEEN CKTS
2	7.77 / .306	3.96±0.05 / .156±.002	NONE
3	11.73 / .462	7.92±0.08 / .312±.003	NONE
4	15.70 / .618	11.89±0.08 / .468±.003	NONE
5	19.66 / .774	15.85±0.10 / .624±.004	NONE
6	23.62 / .930	19.81±0.10 / .780±.004	3 & 4
7	27.58 / 1.086	23.77±0.10 / .936±.004	4 & 5
8	31.55 / 1.242	27.74±0.13 / 1.092±.005	4 & 5
9	35.51 / 1.398	31.70±0.13 / 1.248±.005	5 & 6
10	39.47 / 1.554	35.66±0.13 / 1.404±.005	5 & 6
11	43.43 / 1.710	39.62±0.15 / 1.560±.006	6 & 7
12	47.40 / 1.866	43.59±0.15 / 1.716±.006	4 & 5 / 8 & 9

GEN.DOCS.	3-7	G
ANNNOTATOR	1, 2	G1
SOFTWARE	SHEET	REV

REMOVE PEG DIMS
EC NO: UCP2012-2438 2012/02/02
DRWN:JJAGUILAR 2012/02/21
CHKD:MKIPPER 2012/02/24
APPR:FSMITH
DESCRIPTION
G1
REV

QUALITY SYMBOLS
F =0
C =0
B =0

GENERAL TOLERANCES (UNLESS SPECIFIED)

	mm	INCH
4 PLACES	± ---	± ---
3 PLACES	± ---	± .010
2 PLACES	± 0.25	± .015
1 PLACE	± 0.38	± ---
ANGULAR ±1/2°		

DRAFT WHERE APPLICABLE MUST REMAIN WITHIN DIMENSIONS

DIMENSION STYLE: MM/IN
SCALE: 2:1
DESIGN UNITS: INCH
THIRD ANGLE PROJECTION

DRAWN BY: JSCHAFER DATE: 11-25-03
CHECKED BY: SAMIEC DATE: 11-26-03
APPROVED BY: MARGULIS DATE: 12-1-03

TITLE: KK .156 HEADER ASSEMBLY FRICTION LOCK RT ANGLE WITH PEGS

molex MOLEX INCORPORATED

MATERIAL NO.: SEE CHART
DOCUMENT NO.: SD-42492-001
SHEET NO.: 1 OF 7
SIZE: A

THIS DRAWING CONTAINS INFORMATION THAT IS PROPRIETARY TO MOLEX INCORPORATED AND SHOULD NOT BE USED WITHOUT WRITTEN PERMISSION

tb_frame_A_P_AM_T
Rev. F 2009/06/18

Distributor of Molex Connector Corporation: Excellent Integrated System Limited
Datasheet of 0026645072 - KK 156 HDR FRLK RTAN PEG 7POS
Contact us: sales@integrated-circuit.com Website: www.integrated-circuit.com

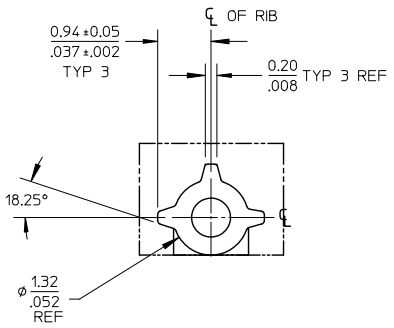

PEG DETAIL
SCALE 10:1

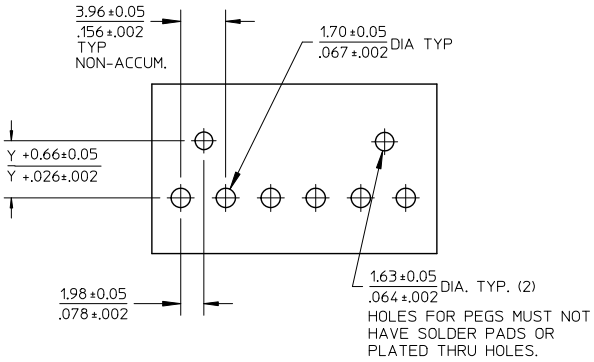

RECOMMENDED PC BOARD HOLE LAYOUT

NOTES:
1. MATERIAL: HEADER-POLYESTER, 94V-0, MOLDED NATURAL (WHITE)
   PINS: BRASS
2. FINISHES: (154) OVERALL TIN 0.00254/.000100 MIN.
   OVER 0.00127/.000050 MIN. NICKEL.
   (197) OVERALL REFLOWED MATTE TIN: 0.00152/.000060 MIN.
   OVER 0.00127/.000050 MIN. NICKEL OVERALL.
   (208) SELECT GOLD 0.00038/.000015 MIN.
   SELECT TIN 0.00254/.000100 MIN.
   OVERALL NICKEL UNDERPLATE 0.00127/.000050 MIN.
   (228) SELECT GOLD 0.00076/.000030 MIN.
   SELECT TIN 0.00254/.000100 MIN.
   OVERALL NICKEL UNDERPLATE 0.00127/.000050 MIN.
   (241) SELECT GOLD: 0.00051/.000020 MIN.
   SELECT TIN: 0.00254/.000100 MIN.
   OVERALL NICKEL UNDERPLATE: 0.00127/.000050 MIN.
3. PRODUCT SPECIFICATION: SEE PS-08-50.
4. PACKAGING INFO: SEE TABLES.
5. SOLDERABILITY: PER SMES-152.
6. PIN PUSH OUT FORCE: PRIOR TO SOLDERING, A 3 LB MINIMUM FORCE (IN EITHER DIRECTION) SHALL BE REQUIRED TO PUSH THE PIN OUT OF THE HEADER.
7. PARTS ARE STACKABLE END TO END ON 3.96/.156 CENTERS.
8. FOR PART WITHOUT PEGS SEE 41792.
9. THIS PART CONFORMS TO CLASS B REQUIREMENTS OF COSMETIC SPECIFICATION PS-45499-002.
10. SLOTS ON BACKWALL ARE BETWEEN CIRCUITS. SEE CHART FOR LOCATION.

SEE SHEET 1	QUALITY SYMBOLS	GENERAL TOLERANCES (UNLESS SPECIFIED)		DIMENSION STYLE MM/IN	SCALE 1:1	DESIGN UNITS INCH	THIRD ANGLE PROJECTION
EC NO: UCP2012-2438 2012/02/02		mm	INCH	DRAWN BY JSCHAFER	DATE 11-25-03	TITLE KK .156 HEADER ASSEMBLY FRICTION LOCK RT ANGLE WITH PEGS	
DRWN:JJAGUILAR 2012/02/21	=0	4 PLACES ± ---	± ---	CHECKED BY SAMIEC	DATE 11-26-03		
CHKD:MKIPPER 2012/02/24	=0	3 PLACES ± ---	± .010	APPROVED BY MARGULIS	DATE 12-1-03	molex MOLEX INCORPORATED	
APPR:FSMITH	=0	2 PLACES ± 0.25	± .015	MATERIAL NO. SEE CHART		DOCUMENT NO. SD-42492-001	SHEET NO. 2 OF 7
DESCRIPTION		1 PLACE ± 0.38	± ---				
REV G1		ANGULAR ±1/2°		SIZE A	THIS DRAWING CONTAINS INFORMATION THAT IS PROPRIETARY TO MOLEX INCORPORATED AND SHOULD NOT BE USED WITHOUT WRITTEN PERMISSION		
		DRAFT WHERE APPLICABLE MUST REMAIN WITHIN DIMENSIONS					