Excellent Integrated System Limited

Stocking Distributor

Click to view price, real time Inventory, Delivery & Lifecycle Information:

Harting
09454521560

For any questions, you can email us directly:
sales@integrated-circuit.com

Alle Rechte vorbehalten/ *All rights reserved*

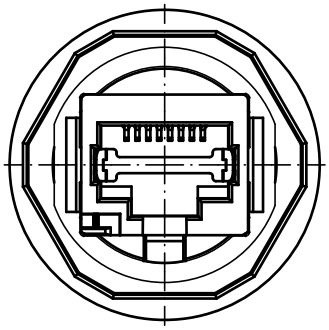

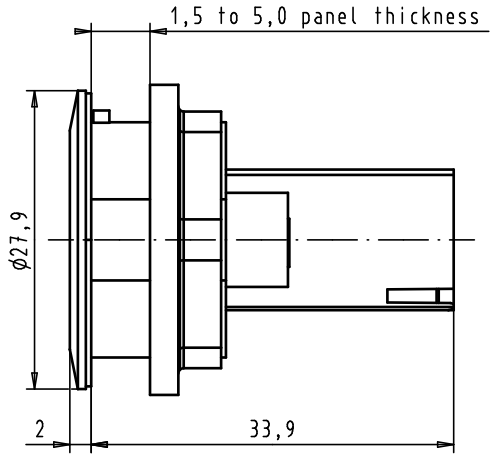

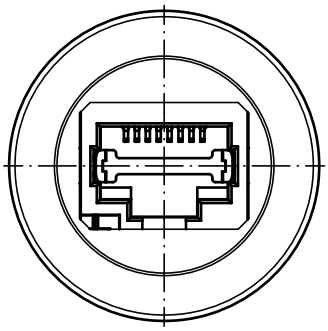

PANEL CUT DIMENSIONS:

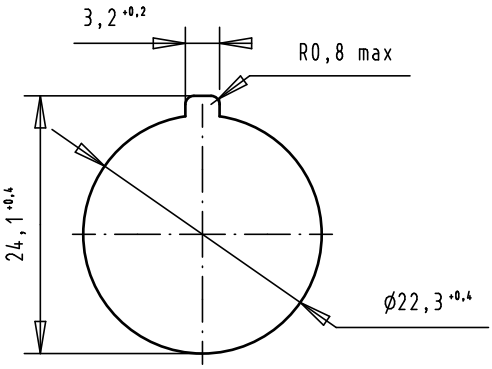

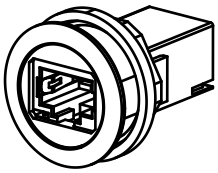

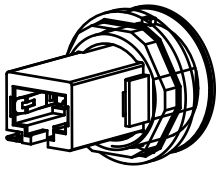

				Dat.	Name		har-port	Maßstab/ Scale
			Detail.	26/JAN/11	BH	All Dim. in mm Orig. Size DIN A 4	RJ45 IP20 coupler Cat.6	2:1
			Insp.	26/JAN/11	JB			
			Stand.					
36227	15-FEB-11	BH	HARTING EURL F-95972 Paris				TB 09 45 452 1560	Blatt/ Page 1/1
36224								
Mod.	Dat.	Name					Sub.	