Excellent Integrated System Limited

Stocking Distributor

Click to view price, real time Inventory, Delivery & Lifecycle Information:

Harting
09457150025

For any questions, you can email us directly:
sales@integrated-circuit.com

Distributor of Harting: Excellent Integrated System Limited
Datasheet of 09457150025 - RJI CBL 4XAWG 22/7 IP67 3M
Contact us! sales@integrated-circuit.com Website: www.integrated-circuit.com

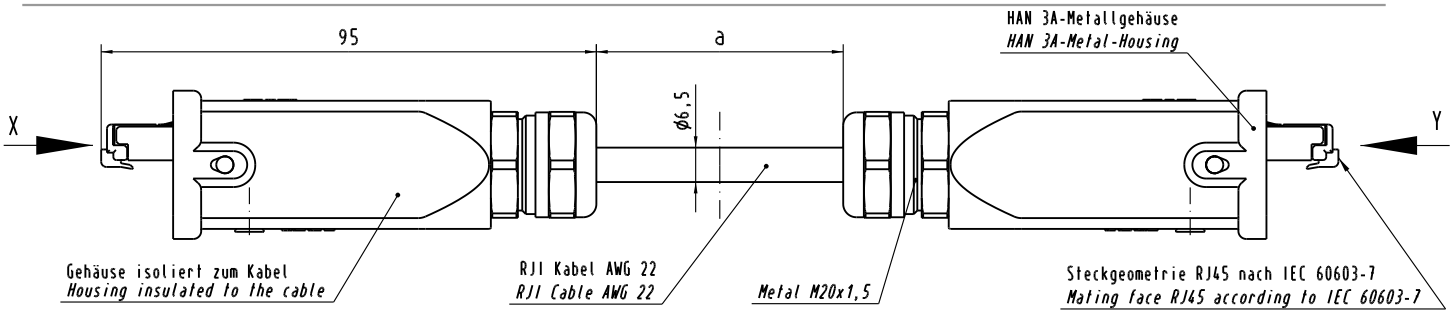

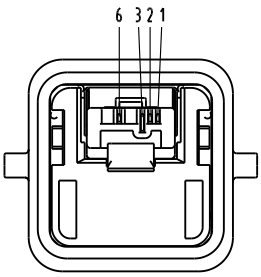

Belegungsplan
Loading-Plan

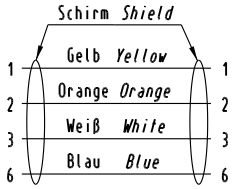

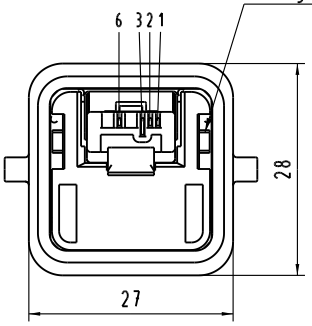

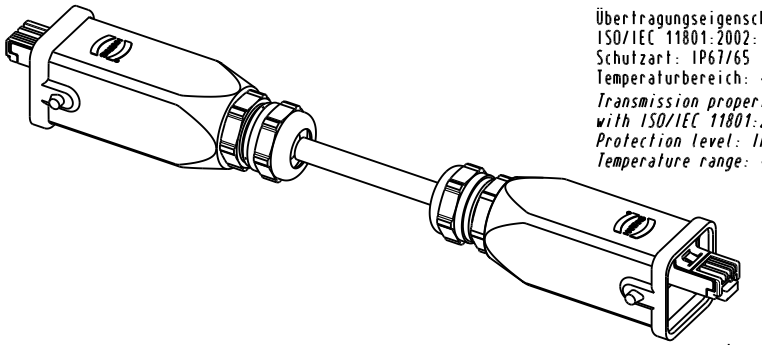

Übertragungseigenschaften nach
ISO/IEC 11801:2002: Class D
Schutzart: IP67/65
Temperaturbereich: -40°C ...+70°C
Transmission properties in accordance with ISO/IEC 11801:2002: Class D
Protection level: IP67/65
Temperature range: -40°C ...+70°C

4xAWG 22/7 schleppfähig/trailing	09 45 715 0061	100	m
4xAWG 22/7 schleppfähig/trailing	09 45 715 0056	50	m
4xAWG 22/7 schleppfähig/trailing	09 45 715 0053	20	m
4xAWG 22/7 schleppfähig/trailing	09 45 715 0051	10	m
4xAWG 22/7 schleppfähig/trailing	09 45 715 0027	5	m
4xAWG 22/7 schleppfähig/trailing	09 45 715 0025	3	m
4xAWG 22/7 schleppfähig/trailing	09 45 715 0023	1,5	m
4xAWG 22/7 flexibel/stranded	09 45 715 1183	100	m
4xAWG 22/7 flexibel/stranded	09 45 715 1178	50	m
4xAWG 22/7 flexibel/stranded	09 45 715 1175	20	m
4xAWG 22/7 flexibel/stranded	09 45 715 1173	10	m
4xAWG 22/7 flexibel/stranded	09 45 715 1168	5	m
4xAWG 22/7 flexibel/stranded	09 45 715 1166	3	m
4xAWG 22/7 flexibel/stranded	09 45 715 1164	1,5	m
4xAWG 22/1 massiv/solid	09 45 715 1161	100	m
4xAWG 22/1 massiv/solid	09 45 715 1156	50	m
4xAWG 22/1 massiv/solid	09 45 715 1153	20	m
4xAWG 22/1 massiv/solid	09 45 715 1151	10	m
4xAWG 22/1 massiv/solid	09 45 715 1127	5	m
4xAWG 22/1 massiv/solid	09 45 715 1125	3	m
4xAWG 22/1 massiv/solid	09 45 715 1123	1,5	m
massiv / flexibel *solid / stranded*	Bestell-Nr. *Part-No.*	Maß a *Dim. a*	

All Dimensions in mm
Original Size DIN A 3

Mod.	Dat.	Name
32429	26.11.04	Wie
32201	24.08.04	Wie
32089	28.06.04	Wie
31013		

Techn. Character.

	Dat.	Name
Detail.	28.05.03	Wae
Insp.	28.05.03	VSo
Stand.		

Maßstab/*Scale* /

HARTING Electronics GmbH & Co. KG
D-32339 ESPELKAMP

Nicht tolerierte Maße/*free size tolerances*

RJI Kabel AWG 22, IP67/65
RJI Cable AWG 22, IP67/65
2x RJ45, Metal, Data 3A

TB 09 45 715 1123

Sub.

Blatt/*page* /

Alle Rechte vorbehalten/ All rights reserved