Excellent Integrated System Limited

Stocking Distributor

Click to view price, real time Inventory, Delivery & Lifecycle Information:

Molex Connector Corporation
0304530800

For any questions, you can email us directly:
sales@integrated-circuit.com

Distributor of Molex Connector Corporation: Excellent Integrated System Limited
Datasheet of 0304530800 - 2MM CABLE HOLDER STR V-0 8CKT
Contact us: sales@integrated-circuit.com Website: www.integrated-circuit.com

30453 30453

NOTE 1

NOTES:

1. FLASH ON HOLE PERIMETER TO BE .08 MAX.
2. THE "X" OR BLANK PRECEEDING THE ITEM NO. INDICATES IT'S NON-AVAILABILITY OR AVAILABILITY, RESPECTIVELY.
3. PRODUCT SPECIFICATION 30452-0000 APPLIES.

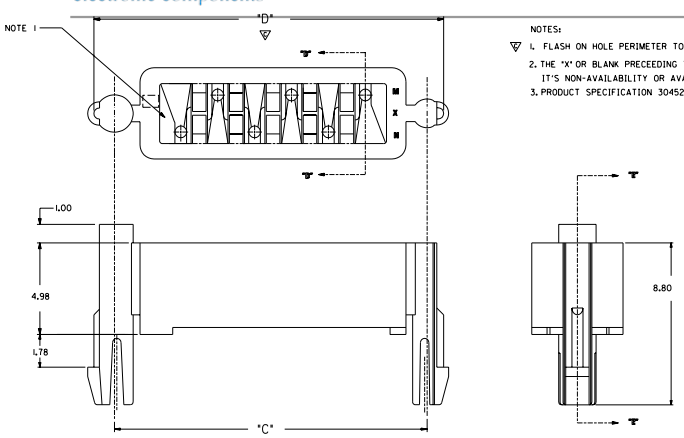

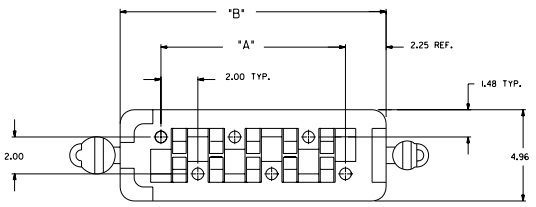

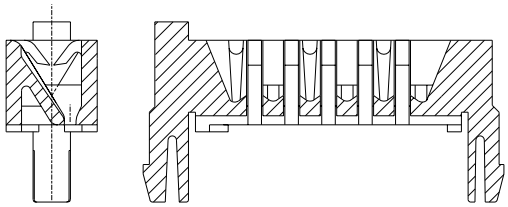

SECTION "D"-"D"

ROTATED 90°

SECTION "E"-"E"

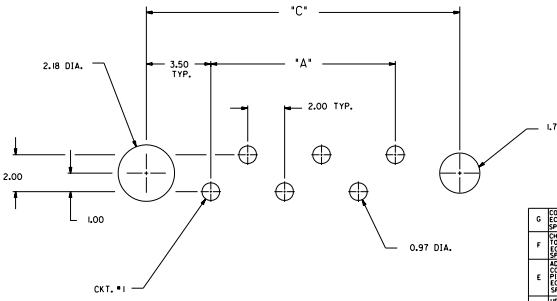

RECOMMENDED P.C. BOARD LAYOUT

BOARD THICKNESS 1.57

BOARD TOLERANCE ± .05

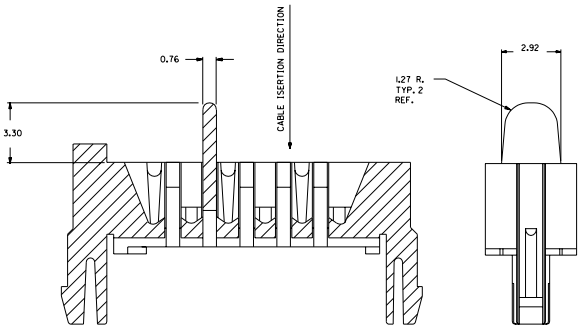

OPTIONAL POLARIZATION FEATURE

LOCATED BETWEEN CIRCUITS 2 & 3

(SEE CHART SHT. 2)

MATERIAL: POLYESTER, VALOX 457 7.5% GLASS FILLED POLYESTER OR EQUIVALENT
COLOR : WHITE

G	CORRECTED DIM. "D" ECN # U5-0007 SPM 94-09-23
F	CHANGED DIM. "C"±2.4" TO "C". ADDED NOTE 3 ECN # U4D133 SPM 94-01-28
E	ADDED CRITICAL DIM. CORRECTED PEG PICTORIALLY ECN # U3I550 SPM 93-12-29
D	UPDATED PEG GEOMETRY ECO # U3-0827 SPM 93-05-28
C	CHANGED DIM. FROM: 2.30 TO 3.30 ECO # U3-0647 SPM 93-04-27
B	DELETED "C" ON PLAN VIEW DELETED .125 REF DELETED NOTE 5 ECO # U3-0387 SPM 93-03-16
A	ECO NO. U21431 ADDED DIM. C + 2.14 MAX.; ADDED NOTE 2 COL. TO CHART; ITEM NO. WAS ENG. NO.; REV. DELCO P/N'S 8.2 REF. WAS 8.2 2.3 REF. WAS 2.3 1.0 REF. WAS 1.0 4.98 REF. WAS 4.98 1.78 REF. WAS 1.78 1.27 REF. WAS 1.27 2.92 REF. WAS 2.92 ADDED NOTE 2; REL TO PROD. DF 9/22/92
10	ADDED 1.00 HIGH POST DF 6/29/92
9	UPDATED DWG LEG 05-27-92
8	CHANGED MATERIAL AJP/LEG 2/24/92
7	REVISED BOARD LOCKS LEG 02-05-92
6	MAT'L WAS NYLON ADD OPTIONAL POLARIZATION FEATURE ECR. #U12164 RJG. 91/11/7
5	REV. LEAD-IN ON END CKTS. ECR. #U11862 RJG. 91/9/10
4	ADD MATERIAL NOTE REV. P.C.B HOLE SIZE AND BOARD LOCK SIZE ECR. #U11150 RJG. 91/6/26
3	ADD 1.25 REF. AND 2.25 REF. RJG. 91/4/10
2	REV. PEGS ECR. #U10729 RJG. 91/4/2
1	WAS 4MM HIGH RJG. 91/3/13

MFG. SH.	REV.	LTR.	REVISIONS
	▽=2	▼=0	REVISE ONLY ON CAD SYSTEM

DIMENSIONS SHOWN: METRIC/INCH
UNLESS OTHERWISE SPECIFIED
TOLERANCE ON ANGLES ± 1°

	DECIMAL	METRIC
2 PLACE	± .005	± .13
3 PLACE	± .01	± .13
4 PLACE	± .---	± .25

DRAFT - MAKE APPLICABLE RULES REMOVE BLOCK DIMENSIONS

TITLE: CABLE HOLDER (VERTICAL) 2.00 PITCH

MOLEX INCORPORATED LISLE, ILL. 60532 CLASS

SHEET NO. 1 OF 2 | DATE 91/3/7

PART NO. SEE CHART | DRWG. NO. SD-30453-****

DRWN. BY	RJG	DATE	LEG
APPD. BY	SC	SCALE	10:1

FILE NAME 30453 DGN | SIZE A | REV D

THE DRAWING CONTAINS INFORMATION THAT IS PROPRIETARY TO MOLEX INC. AND SHOULD NOT BE USED WITHOUT WRITTEN PERMISSION.

Distributor of Molex Connector Corporation: Excellent Integrated System Limited
Datasheet of 0304530800 - 2MM CABLE HOLDER STR V-0 8CKT
Contact us: sales@integrated-circuit.com Website: www.integrated-circuit.com

NOTE 2	ITEM NO.	CKT. #	DIM. "A"	DIM. "B"	DIM. "C"	DIM. "D"	POLARIZATION	NO. OF CABLE RET. FINGERS
	304-53-0400	4	6.00	10.50	13.00	14.90	NOT AVAILABLE	3
X	304-53-0500	5	8.00	12.50	15.00	16.90	YES	4
	304-53-0600	6	10.00	14.50	17.00	18.90	YES	5
X	304-53-0700	7	12.00	16.50	19.00	20.90	YES	6
	304-53-0800	8	14.00	18.50	21.00	22.90	YES	7
	304-53-0900	9	16.00	20.50	23.00	24.90	YES	8
	304-53-1000	10	18.00	22.50	25.00	26.90	YES	9
	304-53-1100	11	20.00	24.50	27.00	28.90	YES	10
	304-53-1200	12	22.00	26.50	29.00	30.90	YES	10 5 AT EACH END
X	304-53-1300	13	24.00	28.50	31.00	32.90	YES	10 5 AT EACH END
X	304-53-1400	14	26.00	30.50	33.00	34.90	YES	10 5 AT EACH END
X	304-53-1500	15	28.00	32.50	35.00	36.90	YES	10 5 AT EACH END
X	304-53-1600	16	30.00	34.50	37.00	38.90	YES	10 5 AT EACH END
X	304-53-1700	17	32.00	36.50	39.00	40.90	YES	10 5 AT EACH END
X	304-53-1800	18	34.00	38.50	41.00	42.90	YES	10 5 AT EACH END
	304-53-1900	19	36.00	40.50	43.00	44.90	YES	10 5 AT EACH END
X	304-53-2000	20	38.00	42.50	45.00	46.90	YES	10 5 AT EACH END
X	304-53-2100	21	40.00	44.50	47.00	48.90	YES	10 5 AT EACH END

G	SEE SHEET 1
F	SEE SHEET 1
E	SEE SHEET 1
D	SEE SHEET 1
C	SEE SHEET 1
B	SEE SHEET 1
A	SEE SHEET 1
10	SEE SHEET 1
9	SEE SHEET 1
8	SEE SHEET 1

MFG. SH.	REV.	LTR.	REVISIONS
			REVISE ONLY ON CAD SYSTEM

DIMENSIONS SHOWN: METRIC/INCH
UNLESS OTHERWISE SPECIFIED
TOLERANCES ARE AS FOLLOWS

	INCHES	METRIC
3 PLACE	± .005	--
2 PLACE	± .01	± 0.13
1 PLACE	± ---	± 0.25

DRAFT - MAYBE APPLICABLE MOLEX REMAIN WITHIN DIMENSIONS

DRWN. BY RJG DATE 91 LEG
APPD. BY SC SCALE 10:1 1

TITLE
CABLE HOLDER
2.00 PITCH

MOLEX INCORPORATED
LISLE, ILL. 60532 U.S.A.

SHEET NO. 2 DATE 91/11/7

PART NO. SEE CHART DRWG. NO. SD-30453-****

FILE NAME 5304531342 THIS DRAWING CONTAINS INFORMATION THAT IS PROPRIETARY TO MOLEX INC. AND SHOULD NOT BE USED WITHOUT WRITTEN PERMISSION REV. AU SHEET D