Excellent Integrated System Limited

Stocking Distributor

Click to view price, real time Inventory, Delivery & Lifecycle Information:

Molex Connector Corporation
0190670115

For any questions, you can email us directly:
sales@integrated-circuit.com

19067

MATERIAL NUMBER	ALTERNATE NUMBER	STUD SIZES	"S"
190670114	J-987-12	1/2	.515
190670115	J-987-34	3/4	.781
190670116	J-987-58	5/8	.656

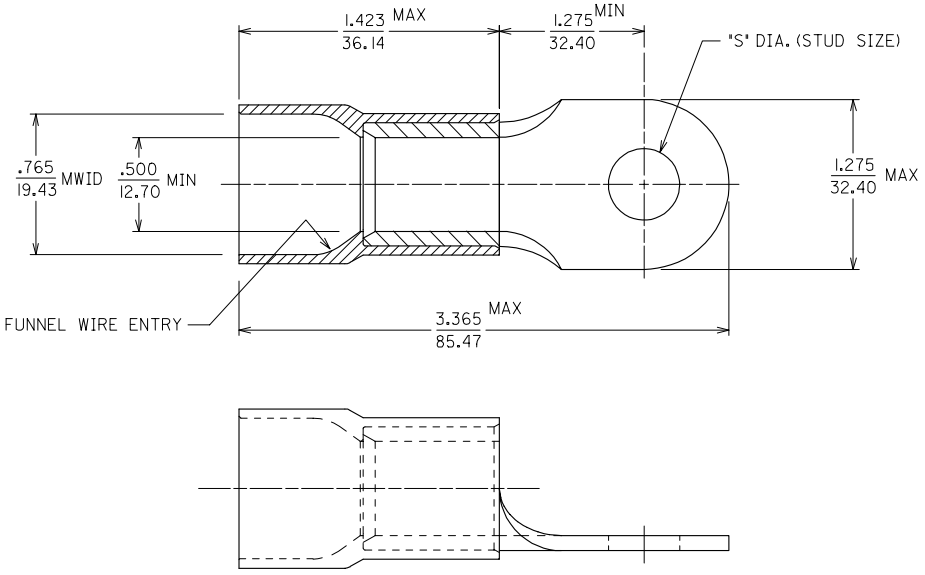

NOTES:
1. MATERIAL: COPPER .083 THICK
   PLATING: ELECTROPLATE TIN
2. INSULATION: YELLOW NYLON 6/6
3. MWID=MAXIMUM WIRE INSULATION DIA.
4. ALL DIMENSIONS IN INCHES/(MM).
5. (B) ASSEMBLY IS ROHS COMPLIANT.

REV	DESCRIPTION
B	CHG TITLE - ADDED ROHS EC NO: ETC2007-0336 DRWN:EHILE 2007/03/14 CHKD:JMACNEIL 2007/03/14 APPR:JMACNEIL 2007/03/15

QUALITY SYMBOLS: ▼=0, ▽=0

GENERAL TOLERANCES (UNLESS SPECIFIED)	mm	INCH
4 PLACES	± ---	± ---
3 PLACES	± ---	± .005
2 PLACES	± 0.13	± .01
1 PLACE	± 0.25	± ---
ANGULAR ±1/2°		

DRAFT WHERE APPLICABLE MUST REMAIN WITHIN DIMENSIONS

DIMENSION STYLE: IN/MM
SCALE: ---
DESIGN UNITS: INCH
THIRD ANGLE PROJECTION

		DATE
DRAWN BY	EDB	2001/02/02
CHECKED BY	HEB	2001/02/02
APPROVED BY	RWD	2001/02/02

TITLE: NYLAKRIMP FUNNEL ENTRY RING TONGUE TERMINAL, 2/0 AWG

MOLEX INCORPORATED

MATERIAL NO.: SEE CHART
DOCUMENT NO.: SD-19067-010
SHEET NO.: 1 OF 1
SIZE: B

THIS DRAWING CONTAINS INFORMATION THAT IS PROPRIETARY TO MOLEX INCORPORATED AND SHOULD NOT BE NOT BE USED WITHOUT WRITTEN PERMISSION

tb_frame_B_P_ME_T
Rev. E 2006/04/15