Excellent Integrated System Limited

Stocking Distributor

Click to view price, real time Inventory, Delivery & Lifecycle Information:

Molex Connector Corporation
0389690009

For any questions, you can email us directly:
sales@integrated-circuit.com

38969

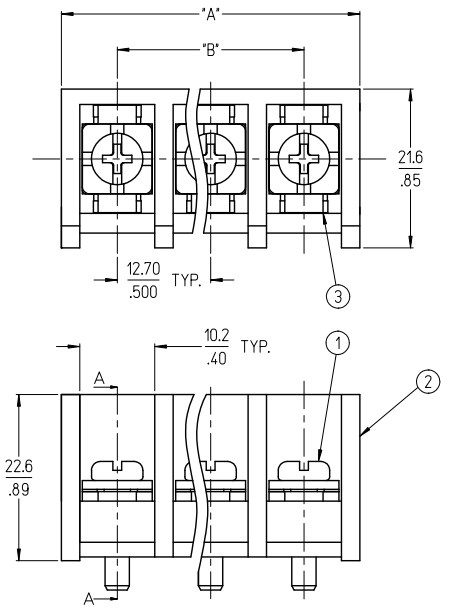

MATERIAL NUMBER LEGEND

389 XX X X XX

INSULATOR STYLE

69 - NO MOUNTING ENDS

OF CIRCUITS

(02 - 15)

TERMINAL STYLE

0 - PC TAILS

SCREW STYLE

0 - M4 WITH SQUARE WASHER, STEEL, NICKEL PLATED (D)

TERM. STYLE 0 - PC TAILS

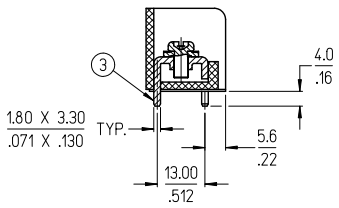

SECTION A-A (SCALE 1:1)

NOTES:

1. MATERIAL:
   (1). SCREW: SEE LEGEND.
   (2). INSULATOR: PBT, UL94V-0
   (3). TERMINAL: BRASS, TIN PLATED
2. WIRE SIZE: 20-8 AWG.
3. RATING: 600V, 50A
4. MAX. TORQUE: 16 IN-LB.
5. OPERATING TEMPERATURE: -40°C TO +120°C
6. NUMBER OF CIRCUIT POSITIONS AVAILABLE = 2 THROUGH 15.
7. ASSEMBLY IS ROHS COMPLIANT.

REV	DESCRIPTION
D	CHANGE SCREW PLATING EC NO: IPG2012-0065 DRWN:MBRZOZOWSKI 2011/12/02 CHKD:RSTONE 2011/12/02 APPR:DTITUS 2011/12/02

QUALITY SYMBOLS: ▼=0, (E)=0

GENERAL TOLERANCES (UNLESS SPECIFIED)

	mm	INCH
4 PLACES	± ---	± ---
3 PLACES	± ---	± .005
2 PLACES	± 0.13	± .01
1 PLACE	± 0.3	± ---
ANGULAR ± 2 °		

DRAFT WHERE APPLICABLE MUST REMAIN WITHIN DIMENSIONS

DIMENSION STYLE: MM/IN
SCALE
DESIGN UNITS: INCH
THIRD ANGLE PROJECTION

DRAWN BY	C. YORK	DATE 2006/11/20
CHECKED BY	J. MACNEIL	DATE 2006/11/20
APPROVED BY	J. MACNEIL	DATE 2006/11/20

TITLE: 12.70MM [.500] SINGLE ROW TRI-BARRIER TERMINAL STRIP

molex MOLEX INCORPORATED

MATERIAL NO.: SEE LEGEND
DOCUMENT NO.: SD-38969-001
SHEET NO.: 1 OF 2
SIZE: B

THIS DRAWING CONTAINS INFORMATION THAT IS PROPRIETARY TO MOLEX INCORPORATED AND SHOULD NOT BE USED WITHOUT WRITTEN PERMISSION

tb_frame_B_P_ME_T
Rev. D 2004/04/02

38969

QUANTITY OF CIRCUITS	DIM. "A"		DIM. "B"	
	mm	in	mm	in
02	27.9	1.10	12.70	.500
03	40.6	1.60	25.40	1.000
04	53.3	2.10	38.10	1.500
05	66.0	2.60	50.80	2.000
06	78.7	3.10	63.50	2.500
07	91.4	3.60	76.20	3.000
08	104.1	4.10	88.90	3.500
09	116.8	4.60	101.60	4.000
10	129.5	5.10	114.30	4.500
11	142.2	5.60	127.00	5.000
12	154.9	6.10	139.70	5.500
13	167.6	6.60	152.40	6.000
14	180.3	7.10	165.10	6.500
15	193.0	7.60	177.80	7.000

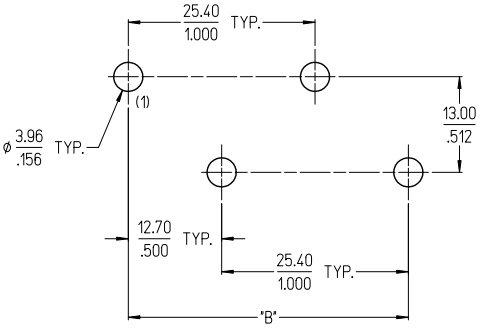

RECOMMENDED PCB LAYOUT

SEE SHEET 1
EC NO: IPG2012-0065
DRWN:MBRZOZOWSKI 2011/12/02
CHKD:RSTONE 2011/12/02
APPR:DTITUS 2011/12/02
DESCRIPTION
D
REV

QUALITY SYMBOLS
▼=0
▽=0

GENERAL TOLERANCES (UNLESS SPECIFIED)

	mm	INCH
4 PLACES	± ---	± ---
3 PLACES	± ---	± .005
2 PLACES	± 0.13	± .01
1 PLACE	± 0.3	± ---
ANGULAR ± 2 °		

DRAFT WHERE APPLICABLE MUST REMAIN WITHIN DIMENSIONS

DIMENSION STYLE: MM/IN
SCALE
DESIGN UNITS: INCH
THIRD ANGLE PROJECTION

DRAWN BY: C. YORK DATE: 2006/11/20
CHECKED BY: J. MACNEIL DATE: 2006/11/20
APPROVED BY: J. MACNEIL DATE: 2006/11/20

TITLE: 12.70MM [.500] SINGLE ROW TRI-BARRIER TERMINAL STRIP

molex MOLEX INCORPORATED

MATERIAL NO.: SEE LEGEND
DOCUMENT NO.: SD-38969-001
SHEET NO.: 2 OF 2
SIZE: B

THIS DRAWING CONTAINS INFORMATION THAT IS PROPRIETARY TO MOLEX INCORPORATED AND SHOULD NOT BE USED WITHOUT WRITTEN PERMISSION

tb_frame_B_P_ME_T
Rev. D 2004/04/02