Excellent Integrated System Limited

Stocking Distributor

Click to view price, real time Inventory, Delivery & Lifecycle Information:

Molex Connector Corporation
0471511062

For any questions, you can email us directly:
sales@integrated-circuit.com

Contact us: sales@integrated-circuit.com Website: www.integrated-circuit.com

NOTES:
1. MATERIAL:
   HOUSING: THERMOPLASTIC. GLASS-FILLED. UL 94V-0. COLOR: SEE TABLE.
   SHELL: COPPER ALLOY.
   TERMINAL: COPPER ALLOY.
2. PLATING:
   TERMINAL:
   CONTACT AREA: (1) 0.76 MICROMETER MIN. GOLD PLATING.
   (2) 0.25 MICROMETER MIN. GOLD PLATING.
   (3) GOLD FLASH.
   (4) 0.375 MICROMETER MIN. GOLD PLATING.
   SOLDER AREA: 1 MICROMETER MIN. TIN-BISMUTH ALLOY PLATED.
   UNDER PLATE: 1.27 MICROMETER MIN. NICKEL.
   SHELL: (a) 1.27 MICROMETER MIN. SOLDERABLE NICKEL PLATE OVERALL.
   (b) GOLD FLASH PLATING OVER 1.27 MICROMETER MIN.
   NICKEL PLATING OVERALL.
3. COPLANARITY IS 0.1MM MAX.
4. PRODUCT SPECIFICATION REFER TO PS-47152-001.
5. PACKAGE SPECIFICATION FOR WITHOUT FLANGE REFER TO PK-47151-001.
6. PRODUCT COMPLIANT TO RoHS DIRECTIVE 2011/65/EU AND ELV DIRECTIVE 2000/53/EC.

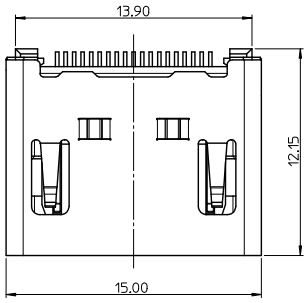

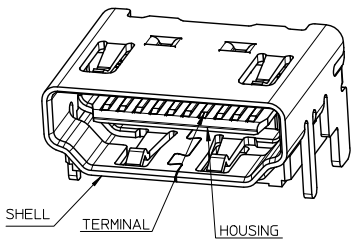

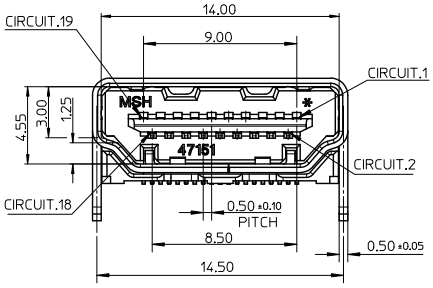

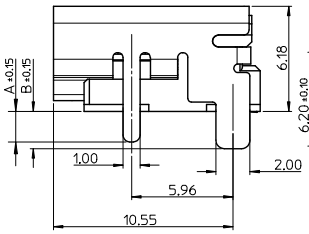

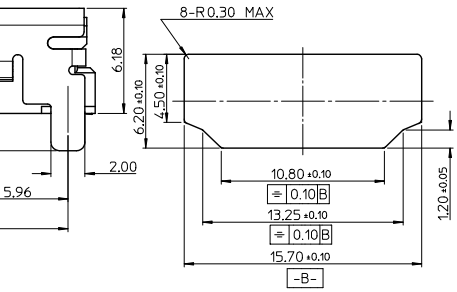

RECOMMENDED PANEL CUT OUT DIMENSION

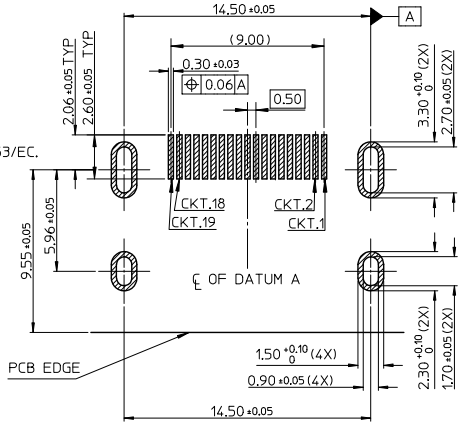

RECOMMENDED PCB LAYOUT
CONNECTOR SIDE

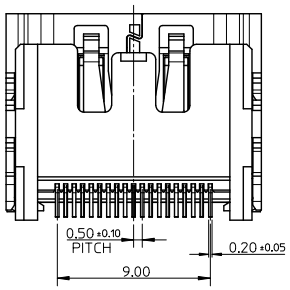

REVISE NOTE			
EC NO: S2014-0536	DRWN:FCS00	CHKD:JTAN02	APPR:KHLIM
2013/12/05	2013/12/17	2013/12/20	
L1			

REV | DESCRIPTION

QUALITY SYMBOLS: E=0, E/C=0, E/P=0

GENERAL TOLERANCES (UNLESS SPECIFIED)	mm	INCH
4 PLACES	± ---	± ---
3 PLACES	± ---	± ---
2 PLACES	± 0.25	± ---
1 PLACE	± 0.25	± ---
0 PLACE	±	±
ANGULAR ± 3 °		

DRAFT WHERE APPLICABLE MUST REMAIN WITHIN DIMENSIONS

DIMENSION STYLE	SCALE	DESIGN UNITS	
MM ONLY	NTS	METRIC	THIRD ANGLE PROJECTION

DRAWN BY	DATE	TITLE
RZHANG	2004/07/20	1.0 HDMI RIGHT ANGLE HEADER ASSEMBLY(19 PIN) LEAD FREE
CHECKED BY	DATE	
GRMA	2004/07/20	
APPROVED BY	DATE	molex
YTYAP	2004/07/20	

MATERIAL NO.	DOCUMENT NO.	SHEET NO.
SEE SHEET 6	SD-47151-001	1 OF 8

SIZE A3

THIS DRAWING CONTAINS INFORMATION THAT IS PROPRIETARY TO MOLEX INCORPORATED AND SHOULD NOT BE USED WITHOUT WRITTEN PERMISSION

tb_frame_A3_P_AM_T
Rev. G 2012/01/11

Contact us: sales@integrated-circuit.com Website: www.integrated-circuit.com

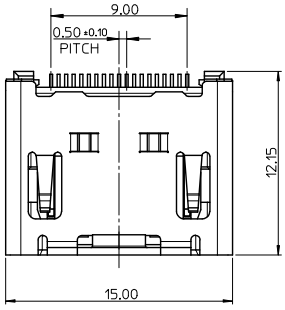

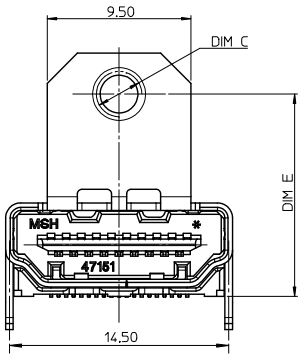

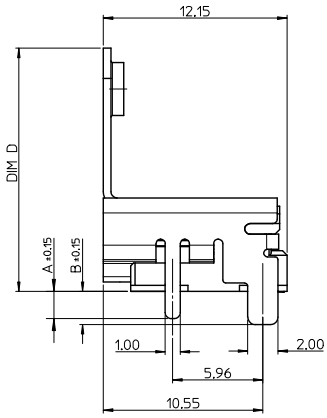

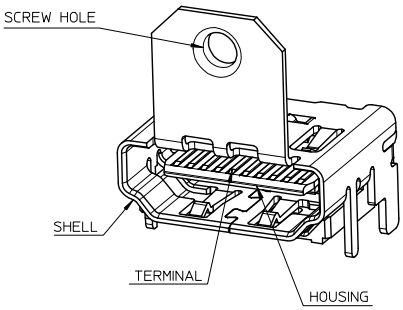

NOTES:

1. THE UNSPECIFIED DIMENSIONS REFER TO SHEET 1.
2. PACKAGE SPECIFICATION FOR WITH FLANGE REFER TO PK-47151-002.

REVISE NOTE			
EC NO: S2014-0536	DRWN:FCS00	CHKD:JTAN02	APPR:KHLIM
2013/12/05	2013/12/17	2013/12/20	
L1			

DESCRIPTION | REV

QUALITY SYMBOLS: E/A=0, E/C=0, E/P=0

GENERAL TOLERANCES (UNLESS SPECIFIED)	mm	INCH
4 PLACES	± ---	± ---
3 PLACES	± ---	± ---
2 PLACES	± 0.25	± ---
1 PLACE	± 0.25	± ---
0 PLACE	±	±
ANGULAR ± 3 °		

DRAFT WHERE APPLICABLE MUST REMAIN WITHIN DIMENSIONS

DIMENSION STYLE	SCALE	DESIGN UNITS	
MM ONLY	NTS	METRIC	THIRD ANGLE PROJECTION

DRAWN BY: RZHANG	DATE: 2004/07/20	TITLE: 1.0 HDMI RIGHT ANGLE HEADER ASSEMBLY(19 PIN) LEAD FREE
CHECKED BY: GRMA	DATE: 2004/07/20	
APPROVED BY: YTYAP	DATE: 2004/07/20	molex
MATERIAL NO.: SEE SHEET 6	DOCUMENT NO.: SD-47151-001	SHEET NO.: 2 OF 8
SIZE: A3		

THIS DRAWING CONTAINS INFORMATION THAT IS PROPRIETARY TO MOLEX INCORPORATED AND SHOULD NOT BE USED WITHOUT WRITTEN PERMISSION

tb_frame_A3_P_AM_T
Rev. G 2012/01/11

Distributor of Molex Connector Corporation: Excellent Integrated System Limited
Datasheet of 0471511062 - Connector Receptacle HDMI 19 Position Surface Mount, Right Angle, Horizontal
Contact us: sales@integrated-circuit.com Website: www.integrated-circuit.com

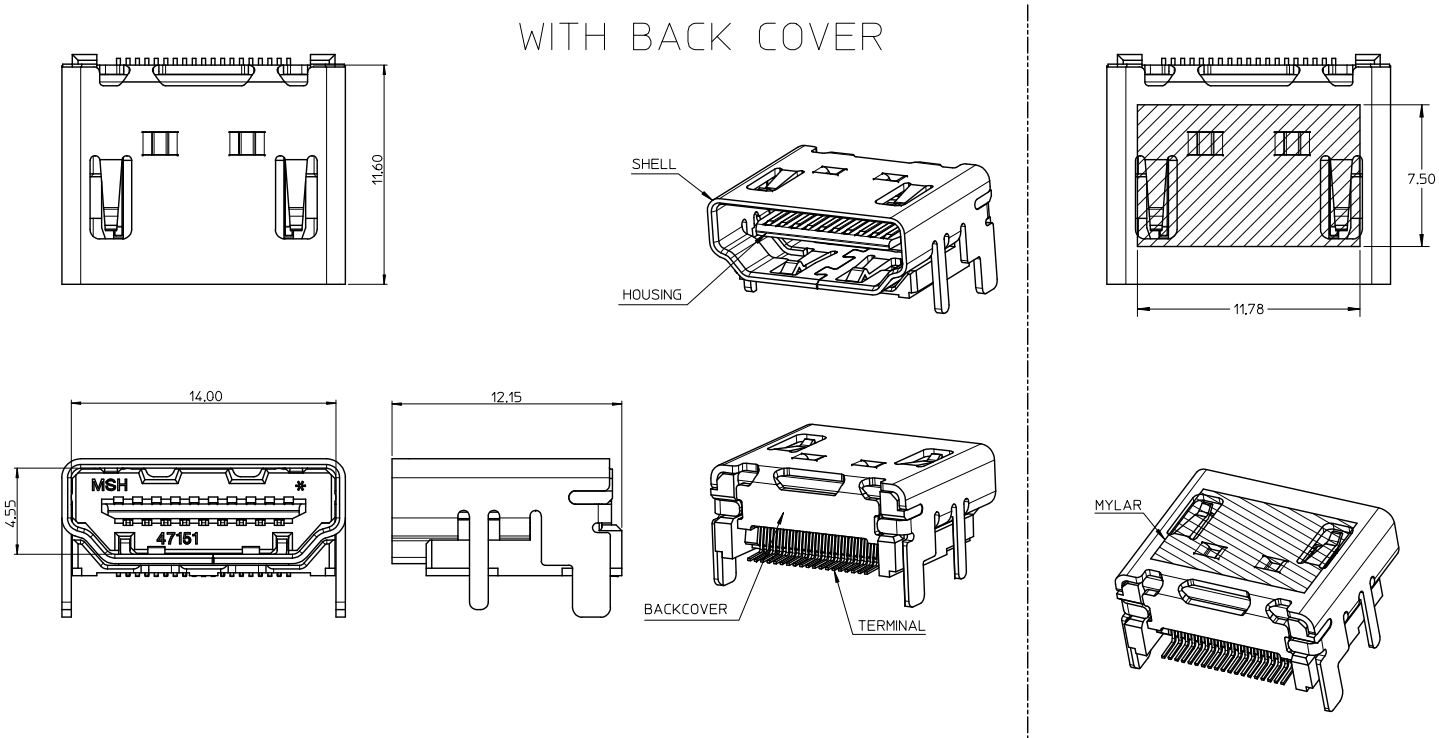

NOTES:
1. THE UNSPECIFIED DIMENSIONS REFER TO 47151-0001.
2. PACKAGE SPECIFICATION FOR WITHOUT FLANGE REFER TO PK-47151-001.

REVISE NOTE			
EC NO: S2014-0536	DRWN:FCS00	CHKD:JTAN02	APPR:KHLIM
2013/12/05	2013/12/17	2013/12/20	
L1			

REV | DESCRIPTION

QUALITY SYMBOLS: A=0, C=0, B=0

GENERAL TOLERANCES (UNLESS SPECIFIED)

	mm	INCH
4 PLACES	± ---	± ---
3 PLACES	± ---	± ---
2 PLACES	± 0.25	± ---
1 PLACE	± 0.25	± ---
0 PLACE	±	±
ANGULAR ± 3 °		

DRAFT WHERE APPLICABLE MUST REMAIN WITHIN DIMENSIONS

DIMENSION STYLE: MM ONLY	SCALE: NTS	DESIGN UNITS: METRIC	THIRD ANGLE PROJECTION
DRAWN BY: RZHANG	DATE: 2004/07/20	THIS IS ONLY FOR 47151-1061/1071/1081	
CHECKED BY: GRMA	DATE: 2004/07/20	1.0 HDMI RIGHT ANGLE HEADER ASSEMBLY(19 PIN) LEAD FREE	
APPROVED BY: YTYAP	DATE: 2004/07/20	molex	
MATERIAL NO.: SEE SHEET 6		DOCUMENT NO.: SD-47151-001	SHEET NO.: 3 OF 8
SIZE: A3			

THIS DRAWING CONTAINS INFORMATION THAT IS PROPRIETARY TO MOLEX INCORPORATED AND SHOULD NOT BE USED WITHOUT WRITTEN PERMISSION

tb_frame_A3_P_AM_T
Rev. G 2012/01/11

Contact us: sales@integrated-circuit.com Website: www.integrated-circuit.com

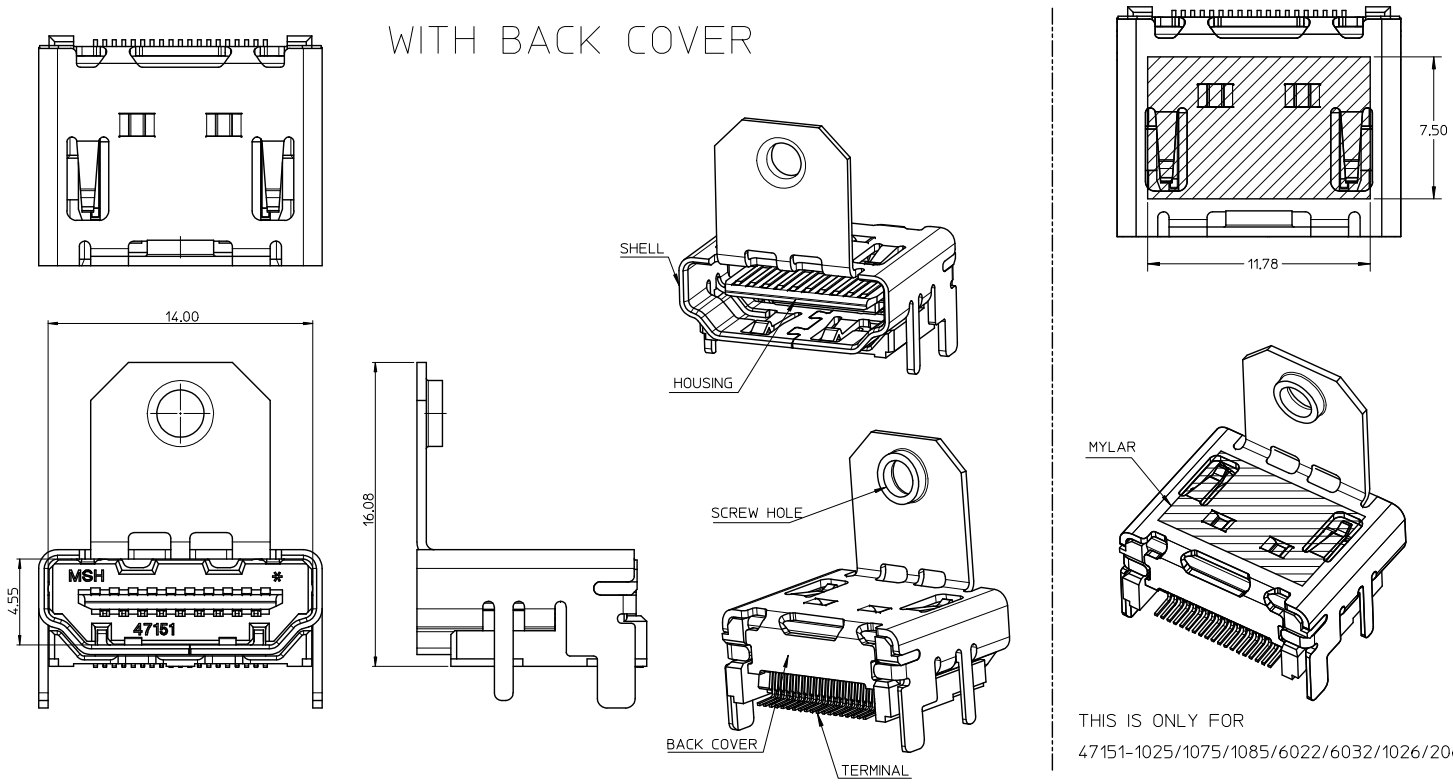

NOTES:
1. THE UNSPECIFIED DIMENSIONS REFER TO 47151-0002.
2. PACKAGE SPECIFIACTION FOR WITH FLANGE:
   OPTION 1: 47151-1026/2062/6032 REFER TO PK-47151-005,
   OPTION 2: 47151-1102 REFER TO PK-47151-003,
   OPTION 3: OTHER PART NUMBER REFER TO PK-47151-002.

REVISE NOTE			
EC NO: S2014-0536	DRWN:FCS00	CHKD:JTAN02	APPR:KHLIM
2013/12/05	2013/12/17	2013/12/20	DESCRIPTION
L1			REV

QUALITY SYMBOLS: F_A=0, F_C=0, F_B=0

GENERAL TOLERANCES (UNLESS SPECIFIED)	mm	INCH
4 PLACES	± ---	± ---
3 PLACES	± ---	± ---
2 PLACES	± 0.25	± ---
1 PLACE	± 0.25	± ---
0 PLACE	±	±
ANGULAR ± 3 °		

DRAFT WHERE APPLICABLE MUST REMAIN WITHIN DIMENSIONS

DIMENSION STYLE	SCALE	DESIGN UNITS	
MM ONLY	NTS	METRIC	THIRD ANGLE PROJECTION

DRAWN BY	DATE
RZHANG	2004/07/20
CHECKED BY	DATE
GRMA	2004/07/20
APPROVED BY	DATE
YTYAP	2004/07/20

TITLE: 1.0 HDMI RIGHT ANGLE HEADER ASSEMBLY(19 PIN) LEAD FREE

molex

MATERIAL NO.: SEE SHEET 6

DOCUMENT NO.: SD-47151-001

SHEET NO.: 4 OF 8

SIZE: A3

THIS DRAWING CONTAINS INFORMATION THAT IS PROPRIETARY TO MOLEX INCORPORATED AND SHOULD NOT BE USED WITHOUT WRITTEN PERMISSION

tb_frame_A3_P_AM_T
Rev. G 2012/01/11

Contact us: sales@integrated-circuit.com Website: www.integrated-circuit.com

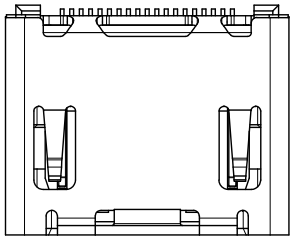

WITHOUT TOP HOLE

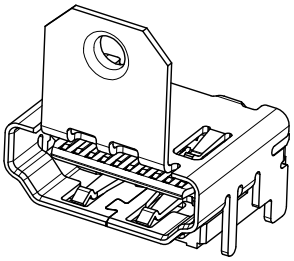

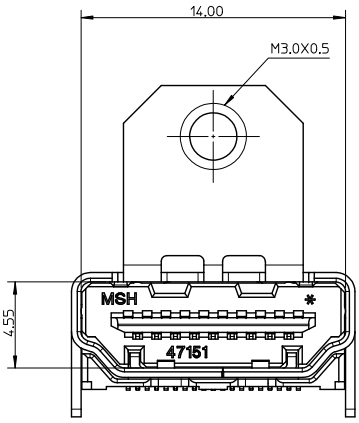

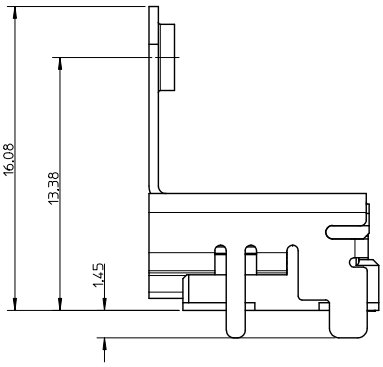

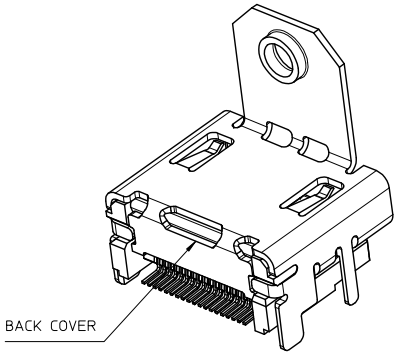

NOTES:
1. THE UNSPECIFIED DIMENSIONS REFER TO 47151-1102.
2. PACKAGE SPECIFIACTION FOR WITH FLANGE REFER TO PK-47151-002.

REVISE NOTE			
EC NO: S2014-0536	DRWN:FCS00	CH'KD:JTAN02	APPR:KHLIM
2013/12/05	2013/12/17	2013/12/20	
L1			

REV | DESCRIPTION

QUALITY SYMBOLS: A=0, C=0, P=0

GENERAL TOLERANCES (UNLESS SPECIFIED)	mm	INCH
4 PLACES	± ---	± ---
3 PLACES	± ---	± ---
2 PLACES	± 0.25	± ---
1 PLACE	± 0.25	± ---
0 PLACE	±	±
ANGULAR ± 3 °		

DRAFT WHERE APPLICABLE MUST REMAIN WITHIN DIMENSIONS

DIMENSION STYLE	SCALE	DESIGN UNITS	
MM ONLY	NTS	METRIC	THIRD ANGLE PROJECTION

DRAWN BY: RZHANG	DATE: 2004/07/20	TITLE: 1.0 HDMI RIGHT ANGLE HEADER ASSEMBLY(19 PIN) LEAD FREE
CHECKED BY: GRMA	DATE: 2004/07/20	
APPROVED BY: YTYAP	DATE: 2004/07/20	molex
MATERIAL NO.: SEE SHEET 6		DOCUMENT NO.: SD-47151-001 — SHEET NO.: 5 OF 8

SIZE: A3

THIS DRAWING CONTAINS INFORMATION THAT IS PROPRIETARY TO MOLEX INCORPORATED AND SHOULD NOT BE USED WITHOUT WRITTEN PERMISSION

tb_frame_A3_P_AM_T
Rev. G 2012/01/11

Distributor of Molex Connector Corporation: Excellent Integrated System Limited
Datasheet of 0471511062 - Connector Receptacle HDMI 19 Position Surface Mount, Right Angle, Horizontal

Contact us: sales@integrated-circuit.com Website: www.integrated-circuit.com

ASSEMBLY P/N	DIMENSION					FEATURE				HOUSING COLOUR	GOLD PLATING IN CONACT AREA	SHELL PLATING	REMARK
	DIM A	DIM B	DIM C	DIM D	DIM E	FLANGE	BACK COVER	TOP HOLES	MYLAR				
47151-0001	1.80	2.20	/	/	/	W/O	W/O	WITH	W/O	BLACK	SEE NOTE 2 (1)	SEE NOTE 2 (a)	FOR SHEET 1
47151-0041											SEE NOTE 2 (2)		
47151-0051											SEE NOTE 2 (3)		
47151-0011										NATURE	SEE NOTE 2 (1)		
47151-0071											SEE NOTE 2 (2)		
47151-0061											SEE NOTE 2 (3)		
47151-0021										BLACK	SEE NOTE 2 (1)	SEE NOTE 2 (b)	
47151-0031										NATURE	SEE NOTE 2 (1)		
47151-0101	1.45	1.45	/	/	/	W/O	W/O	WITH	W/O	BLACK	SEE NOTE 2 (1)	SEE NOTE 2 (a)	
47151-0141											SEE NOTE 2 (2)		
47151-0151											SEE NOTE 2 (3)		
47151-0111										NATURE	SEE NOTE 2 (1)		
47151-0181											SEE NOTE 2 (2)		
47151-0161											SEE NOTE 2 (3)		
47151-0121										BLACK	SEE NOTE 2 (1)	SEE NOTE 2 (b)	
47151-0131										NATURE	SEE NOTE 2 (1)		
47151-0002	1.80	2.20	M3.0X0.5	16.08	13.38	WITH	W/O	WITH	W/O	BLACK	SEE NOTE 2 (1)	SEE NOTE 2 (a)	FOR SHEET 2
47151-0042											SEE NOTE 2 (2)		
47151-0062											SEE NOTE 2 (3)		
47151-0012										NATURE	SEE NOTE 2 (1)		
47151-0052											SEE NOTE 2 (2)		
47151-0072											SEE NOTE 2 (3)		
47151-0022										BLACK	SEE NOTE 2 (1)	SEE NOTE 2 (b)	
47151-0032										NATURE	SEE NOTE 2 (1)		
47151-0102	1.45	1.45	M3.0X0.5	16.08	13.38	WITH	W/O	WITH	W/O	BLACK	SEE NOTE 2 (1)	SEE NOTE 2 (a)	
47151-0142											SEE NOTE 2 (2)		
47151-0162											SEE NOTE 2 (3)		
47151-0112										NATURE	SEE NOTE 2 (1)		
47151-0152											SEE NOTE 2 (2)		
47151-0172											SEE NOTE 2 (3)		
47151-0122										BLACK	SEE NOTE 2 (1)	SEE NOTE 2 (b)	
47151-0132										NATURE	SEE NOTE 2 (1)		
47151-6002	1.80	2.20	M3.0X0.5	14.25	11.28	WITH	W/O	WITH	W/O	BLACK	SEE NOTE 2 (1)	SEE NOTE 2 (a)	
47151-6062											SEE NOTE 2 (2)		
47151-6082											SEE NOTE 2 (3)		
47151-6102	1.45	1.45	M3.0X0.5	14.25	11.28	WITH	W/O	WITH	W/O	BLACK	SEE NOTE 2 (1)		
47151-6172											SEE NOTE 2 (2)		
47151-6162											SEE NOTE 2 (3)		

REVISE NOTE
EC NO: S2014-0536 2013/12/05
DRWN:FCS00 2013/12/17
CHKD:JTAN02 2013/12/20
APPR:KHLIM
DESCRIPTION
REV
L1

QUALITY SYMBOLS
$\sqrt{F_A}$=0
$\sqrt{F_C}$=0
$\sqrt{F_P}$=0

GENERAL TOLERANCES (UNLESS SPECIFIED)

	mm	INCH
4 PLACES	± ---	± ---
3 PLACES	± ---	± ---
2 PLACES	± 0.25	± ---
1 PLACE	± 0.25	± ---
0 PLACE	±	±
ANGULAR ± 3 °		

DRAFT WHERE APPLICABLE MUST REMAIN WITHIN DIMENSIONS

DIMENSION STYLE: MM ONLY
SCALE: NTS
DESIGN UNITS: METRIC
THIRD ANGLE PROJECTION

DRAWN BY: RZHANG DATE: 2004/07/20
CHECKED BY: GRMA DATE: 2004/07/20
APPROVED BY: YTYAP DATE: 2004/07/20
MATERIAL NO.: SEE SHEET 6
SIZE: A3

TITLE: 1.0 HDMI RIGHT ANGLE HEADER ASSEMBLY(19 PIN) LEAD FREE

molex

DOCUMENT NO.: SD-47151-001
SHEET NO.: 6 OF 8

THIS DRAWING CONTAINS INFORMATION THAT IS PROPRIETARY TO MOLEX INCORPORATED AND SHOULD NOT BE USED WITHOUT WRITTEN PERMISSION

tb_frame_A3_P_AM_T
Rev. G 2012/01/11

Contact us: sales@integrated-circuit.com Website: www.integrated-circuit.com

ASSEMBLY P/N	DIMENSION					FEATURE				HOUSING COLOUR	GOLD PLATING IN CONACT AREA	SHELL PLATING	REMARK
	DIM A	DIM B	DIM C	DIM D	DIM E	FLANGE	BACK COVER	TOP HOLES	MYLAR				
47151-1001	1.80	2.20	/	/	/	W/O	WITH	WITH	W/O	BLACK	SEE NOTE 2 (1)	SEE NOTE 2 (a)	FOR SHEET 3
47151-1041											SEE NOTE 2 (2)		
47151-1051											SEE NOTE 2 (3)		
47151-1003											SEE NOTE 2 (4)		
47151-1061									WITH	BLACK	SEE NOTE 2 (1)		
47151-1071											SEE NOTE 2 (2)		
47151-1081											SEE NOTE 2 (3)		
47151-1011									W/O	NATURE	SEE NOTE 2 (1)		
47151-1211											SEE NOTE 2 (2)		
47151-1311											SEE NOTE 2 (3)		
47151-1021										BLACK	SEE NOTE 2 (1)	SEE NOTE 2 (b)	
47151-1091											SEE NOTE 2 (3)		
47151-1031										NATURE	SEE NOTE 2 (1)		
47151-1101	1.45	1.45	/	/	/	W/O	WITH	WITH	W/O	BLACK	SEE NOTE 2 (1)	SEE NOTE 2 (a)	
47151-1141											SEE NOTE 2 (2)		
47151-1151											SEE NOTE 2 (3)		
47151-1111										NATURE	SEE NOTE 2 (1)		
47151-1161											SEE NOTE 2 (2)		
47151-1171											SEE NOTE 2 (3)		
47151-1121										BLACK	SEE NOTE 2 (1)	SEE NOTE 2 (b)	
47151-1131										NATURE	SEE NOTE 2 (1)		
47151-7102	1.45	1.45	M3.0X0.5	16.08	13.38	WITH	WITH	W/O	W/O	BLACK	SEE NOTE 2 (1)	SEE NOTE 2 (a)	FOR SHEET 5
47151-7142											SEE NOTE 2 (2)		
47151-7162											SEE NOTE 2 (3)		

REVISE NOTE
EC NO: S2014-0536 2013/12/05
DRWN:FCS00 2013/12/17
CHKD:JTAN02 2013/12/20
APPR:KHLIM
DESCRIPTION
L1
REV

QUALITY SYMBOLS
E/A=0
E/C=0
E/P=0

GENERAL TOLERANCES (UNLESS SPECIFIED)

	mm	INCH
4 PLACES	± ---	± ---
3 PLACES	± ---	± ---
2 PLACES	± 0.25	± ---
1 PLACE	± 0.25	± ---
0 PLACE	±	±

ANGULAR ± 3 °
DRAFT WHERE APPLICABLE MUST REMAIN WITHIN DIMENSIONS

DIMENSION STYLE: MM ONLY
SCALE: NTS
DESIGN UNITS: METRIC
THIRD ANGLE PROJECTION

		DATE
DRAWN BY	RZHANG	2004/07/20
CHECKED BY	GRMA	2004/07/20
APPROVED BY	YTYAP	2004/07/20

TITLE: 1.0 HDMI RIGHT ANGLE HEADER ASSEMBLY(19 PIN) LEAD FREE

molex

MATERIAL NO.: SEE SHEET 6
DOCUMENT NO.: SD-47151-001
SHEET NO.: 7 OF 8
SIZE: A3

THIS DRAWING CONTAINS INFORMATION THAT IS PROPRIETARY TO MOLEX INCORPORATED AND SHOULD NOT BE USED WITHOUT WRITTEN PERMISSION

tb_frame_A3_P_AM_T
Rev. G 2012/01/11

Contact us: sales@integrated-circuit.com Website: www.integrated-circuit.com

ASSEMBLY P/N	DIMENSION					FEATURE				HOUSING COLOUR	GOLD PLATING IN CONACT AREA	SHELL PLATING	REMARK
	DIM A	DIM B	DIM C	DIM D	DIM E	FLANGE	BACK COVER	TOP HOLES	MYLAR				
47151-1002	1.80	2.20	M3.0X0.5	16.08	13.38	WITH	WITH	WITH	W/O	BLACK	SEE NOTE 2 (1)	SEE NOTE 2 (a)	FOR SHEET 4
47151-1042											SEE NOTE 2 (2)		
47151-1052											SEE NOTE 2 (3)		
47151-1062											SEE NOTE 2 (4)		
47151-2062									WITH	BLACK	SEE NOTE 2 (4)		
47151-1012									W/O	NATURE	SEE NOTE 2 (1)		
47151-1072											SEE NOTE 2 (2)		
47151-1082											SEE NOTE 2 (3)		
47151-1022										BLACK	SEE NOTE 2 (1)	SEE NOTE 2 (b)	
47151-1032										NATURE	SEE NOTE 2 (1)		
47151-1102	1.45	1.45	M3.0X0.5	16.08	13.38	WITH	WITH	WITH	W/O	BLACK	SEE NOTE 2 (1)	SEE NOTE 2 (a)	
47151-1142											SEE NOTE 2 (2)		
47151-1152											SEE NOTE 2 (3)		
47151-1112										NATURE	SEE NOTE 2 (1)		
47151-1162											SEE NOTE 2 (2)		
47151-1172											SEE NOTE 2 (3)		
47151-1122										BLACK	SEE NOTE 2 (1)	SEE NOTE 2 (b)	
47151-1132										NATURE	SEE NOTE 2 (1)		
47151-1005	1.80	2.20	4-40	16.08	13.38	WITH	WITH	WITH	W/O	BLACK	SEE NOTE 2 (1)	SEE NOTE 2 (a)	
47151-1045											SEE NOTE 2 (2)		
47151-1065											SEE NOTE 2 (3)		
47151-1015										NATURE	SEE NOTE 2 (1)		
47151-1035											SEE NOTE 2 (2)		
47151-1055											SEE NOTE 2 (3)		
47151-1025									WITH	BLACK	SEE NOTE 2 (1)		
47151-1075											SEE NOTE 2 (2)		
47151-1085											SEE NOTE 2 (3)		
47151-1026											SEE NOTE 2 (1)		
47151-6012	1.80	2.20	M3.0X0.5	14.25	11.28	WITH	WITH	WITH	W/O	BLACK	SEE NOTE 2 (1)	SEE NOTE 2 (a)	
47151-6042											SEE NOTE 2 (2)		
47151-6052											SEE NOTE 2 (3)		
47151-6022									WITH	BLACK	SEE NOTE 2 (1)		
47151-6032											SEE NOTE 2 (3)		
47151-6112	1.45	1.45							W/O	BLACK	SEE NOTE 2 (1)		
47151-6142											SEE NOTE 2 (2)		
47151-6152											SEE NOTE 2 (3)		

REVISE NOTE
EC NO: S2014-0536 2013/12/05
DRWN:FCS00 2013/12/17
CHKD:JTAN02 2013/12/17
APPR:KHLIM 2013/12/20
DESCRIPTION
REV L1

QUALITY SYMBOLS
$\sqrt{E_A}$=0
$\sqrt{E_C}$=0
$\sqrt{E_P}$=0

GENERAL TOLERANCES (UNLESS SPECIFIED)

	mm	INCH
4 PLACES	± ---	± ---
3 PLACES	± ---	± ---
2 PLACES	± 0.25	± ---
1 PLACE	± 0.25	± ---
0 PLACE	±	±
ANGULAR ± 3 °		

DRAFT WHERE APPLICABLE MUST REMAIN WITHIN DIMENSIONS

DIMENSION STYLE: MM ONLY
SCALE: NTS
DESIGN UNITS: METRIC
THIRD ANGLE PROJECTION

		DATE
DRAWN BY	RZHANG	2004/07/20
CHECKED BY	GRMA	2004/07/20
APPROVED BY	YTYAP	2004/07/20

TITLE: 1.0 HDMI RIGHT ANGLE HEADER ASSEMBLY(19 PIN) LEAD FREE

molex

MATERIAL NO.: SEE SHEET 6
DOCUMENT NO.: SD-47151-001
SHEET NO.: 8 OF 8
SIZE: A3

THIS DRAWING CONTAINS INFORMATION THAT IS PROPRIETARY TO MOLEX INCORPORATED AND SHOULD NOT BE USED WITHOUT WRITTEN PERMISSION

tb_frame_A3_P_AM_T
Rev. G 2012/01/11