Excellent Integrated System Limited

Stocking Distributor

Click to view price, real time Inventory, Delivery & Lifecycle Information:

Molex Connector Corporation
0907790006

For any questions, you can email us directly:
sales@integrated-circuit.com

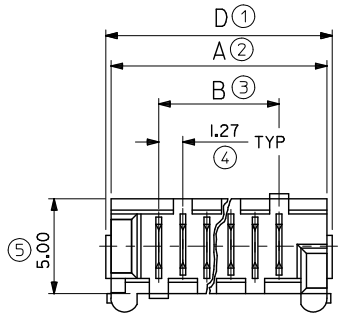

MOULD BASE COLOUR: NATURAL

PART NO.	NO. OF CKTS	DIM. A	DIM. B	DIM. C	DIM. D
90779-**13	26	36.80	31.75	35.35	37.26
-**12	24	34.26	29.21	32.81	34.72
-**11	22	31.72	26.67	30.27	32.18
-**10	20	29.18	24.13	27.73	29.64
-**08	18	26.64	21.59	25.19	27.10
-**07	16	24.10	19.05	22.65	24.56
-**06	14	21.56	16.51	20.11	22.02
-**05	12	19.02	13.97	17.57	19.48
-**04	10	16.48	11.43	15.03	16.94
-**03	8	13.94	8.89	12.49	14.40
-**02	6	11.40	6.35	9.95	11.86
90779-**01	4	8.86	3.81	7.41	9.32

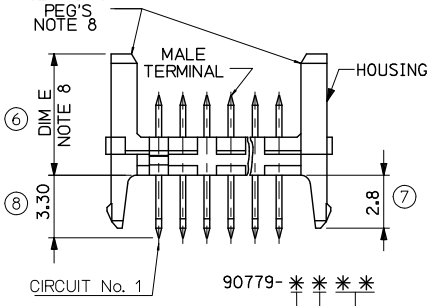

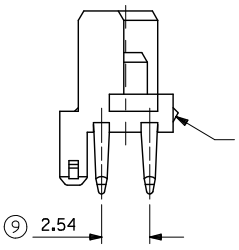

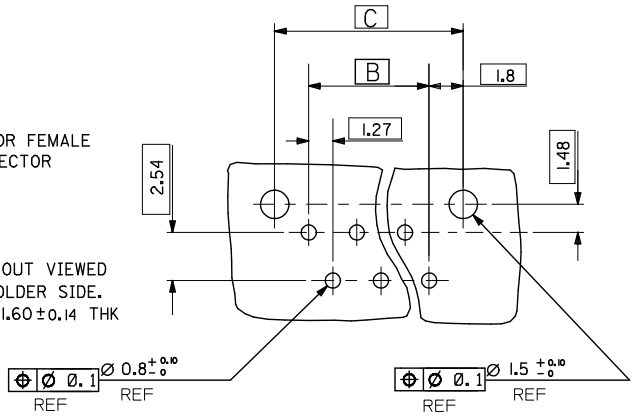

CIRCUIT SIZE 04CKT TO 26CKT
-SEE TABLE ABOVE FOR PART CODE

0 - STANDARD
9 - SHORT VERSION

0= 4-6um TIN ASSY
3= 0.6um PALLADIUM NICKEL ASSY
7= 0.6um PALLADIUM NICKEL, TUBED
9= 4-6um TIN ASSY TUBED

PCB LAYOUT VIEWED FROM SOLDER SIDE.
BOARD 1.60±0.14 THK

NOTES
1. HOUSING. NYLON 46, GLASS FILLED UL 94 V-0, NATURAL (WHITE).
2. TERMINAL. BRASS
   PLATING. TIN: 1.27 MICROMETRE MIN NICKEL
   UNDER 4-6 MICROMETRE TIN

   PLATING PALLADIUM NICKEL (PdNi): 1.27 MICROMETRE MIN. NICKEL
   UNDER 3-5 MICROMETRE TIN SELECTIVE
   AND 0.6 MICROMETRE PdNi UNDER 0.05 MICROMETRE GOLD FLASH
3. APPLICATION CLASS TO DIN 40040 HME (-25°C/+100°C)
4. PIN PUSH FORCE 7N
5. TEST VOLTAGE: 750V.A.C./1 MIN
6. COMPATIBLE WITH MOLEX PART 90327
7. PRODUCT SPECIFICATION: PS-99020-0011
8. POLARISING PEG AVAILABLE IN 2 OPTIONS
   DIM E: STANDARD 6.40mm
   DIM E: SHORT VERSION 4.10mm
9. PACKAGING SPECIFICATION: PK-90325-002

LAST INSPECTION NUMBER USED: 9

REMOVED GOLD OPTION 2012/03/22
ADDED PACKAGING SPEC 2012/03/29
EC NO: IFG2012-0576 2012/07/17
DRWN:DBYRNES
CHKD:SMCGREEVY
APPR:EFOLAN
REV T
DESCRIPTION

QUALITY SYMBOLS
▼=0
Ⓒ=0

GENERAL TOLERANCES (UNLESS SPECIFIED)	mm	INCH
4 PLACES	± ---	± ---
3 PLACES	± 0.20	± ---
2 PLACES	± 0.20	± ---
1 PLACE	± ---	± ---
ANGULAR ±---°		

DRAFT WHERE APPLICABLE MUST REMAIN WITHIN DIMENSIONS

DIMENSION STYLE: MM ONLY
SCALE: 5:1
DESIGN UNITS: METRIC
THIRD ANGLE PROJECTION

DRAWN BY: BGB DATE: 1992/08/21
CHECKED BY: DMORIARTY DATE: 2004/12/03
APPROVED BY: JDENNEHY DATE: 2004/12/03
MATERIAL NO.: SEE CHART

TITLE: HEADER ASSEMBLY

molex MOLEX INCORPORATED

DOCUMENT NO.: SDA-90779
SHEET NO.: 1 OF 1
SIZE: A3

THIS DRAWING CONTAINS INFORMATION THAT IS PROPRIETARY TO MOLEX INCORPORATED AND SHOULD NOT BE USED WITHOUT WRITTEN PERMISSION

tb_frame_A3_P_ME_T
Rev. D 2004/04/02