Excellent Integrated System Limited

Stocking Distributor

Click to view price, real time Inventory, Delivery & Lifecycle Information:

Molex Connector Corporation
0399900404

For any questions, you can email us directly:
sales@integrated-circuit.com

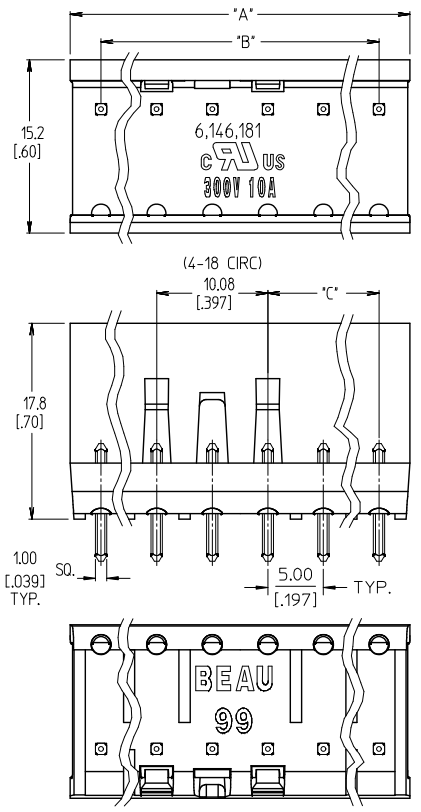

NOTES:

1. MATERIAL: SEE TABLE
2. FINISHES: SEE TABLE
3. MATES WITH: 99 SERIES PLUG
4. INCH DIMENSIONS ARE SHOWN IN BRACKETS [.XXX].
5. "XX" REFERS TO QTY OF CIRCUITS
6. ALL COMPONENTS ARE ROHS COMPLIANT.

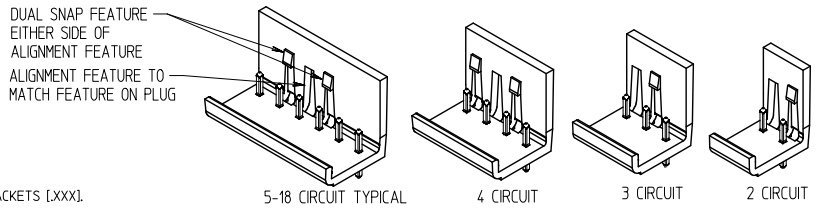

AUXILIARY VIEWS
SCALE 1:1

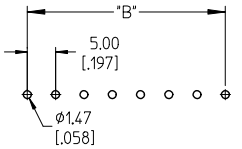

RECOMMENDED PTH PATTERN
SCALE 2:1

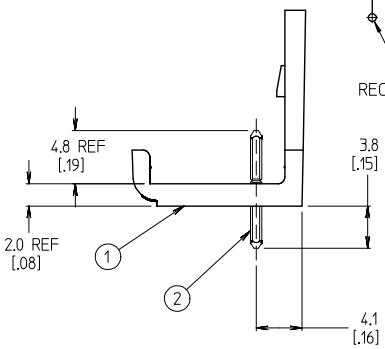

ASSEMBLY MATERIAL NO. (STANDARD)	NUMBER OF CIRCUITS "XX"	DIM. ± 0.25 "A" [± .10]	DIM. "B"	DIM. "C"
399900402	02	10.59 [.417]	5.00 [.197]	N/A
399900403	03	15.60 [.614]	10.00 [.394]	5.00 [.197]
399900404	04	20.60 [.811]	15.00 [.591]	5.00 [.197]
399900405	05	25.60 [1.008]	20.00 [.787]	5.00 [.197]
399900406	06	30.61 [1.205]	25.00 [.984]	10.00 [.394]
399900407	07	35.61 [1.402]	30.00 [1.181]	10.00 [.394]
399900408	08	40.61 [1.599]	35.00 [1.378]	15.00 [.591]
399900409	09	45.62 [1.796]	40.00 [1.575]	15.00 [.591]
399900410	10	50.62 [1.993]	45.00 [1.772]	20.00 [.787]
399900411	11	55.63 [2.190]	50.00 [1.968]	20.00 [.787]
399900412	12	60.63 [2.387]	55.00 [2.165]	25.00 [.984]
399900413	13	65.63 [2.584]	60.00 [2.362]	25.00 [.984]
399900414	14	70.64 [2.781]	65.00 [2.559]	30.00 [1.181]
399900415	15	75.64 [2.978]	70.00 [2.756]	30.00 [1.181]
399900416	16	80.65 [3.175]	75.00 [2.953]	35.00 [1.378]
399900417	17	85.65 [3.372]	80.00 [3.150]	35.00 [1.378]
399900418	18	90.65 [3.569]	85.00 [3.346]	40.00 [1.575]

ITEM	QTY	DESCRIPTION	MATERIAL	FINISH
2	XX	HEADER PIN (STANDARD)	BRASS	TIN
1	1	MOLDING	NYLON	BLACK

REMOVED GOLD OPT
EC NO: IPG2016-1388
DRWN:RSTONE 2016/04/13
CHKD:MZILLELINSKI 2016/04/20
APPR:BRUPERT 2016/04/22
DESCRIPTION
REV

QUALITY SYMBOLS
▼=0
▽=0

GENERAL TOLERANCES (UNLESS SPECIFIED)

	mm	INCH
4 PLACES	± ---	± ---
3 PLACES	± ---	± .005
2 PLACES	± 0.13	± .01
1 PLACE	± 0.3	± ---
ANGULAR ± 2 °		

DRAFT WHERE APPLICABLE MUST REMAIN WITHIN DIMENSIONS

DIMENSION STYLE: MM/IN
SCALE
DESIGN UNITS: INCH
THIRD ANGLE PROJECTION

DRAWN BY: C. YORK DATE: 2003/08/12
CHECKED BY: P. WALTZ DATE: 2003/12/04
APPROVED BY: G. ROBERTSON DATE: 2003/12/08

TITLE: 5.00/.197 SINGLE ROW EUROSTYLE HEADER ASSEMBLY

molex MOLEX INCORPORATED

MATERIAL NO.: SEE CHART
DOCUMENT NO.: SD-39990-002
SHEET NO.: 1 OF 1
SIZE: B

THIS DRAWING CONTAINS INFORMATION THAT IS PROPRIETARY TO MOLEX INCORPORATED AND SHOULD NOT BE USED WITHOUT WRITTEN PERMISSION

tb_frame_B_P_ME_T
Rev. D 2004/04/02