MATERIAL NUMBER	NUMBER OF PEGS
455580003	2

NOTES:
1) MATERIAL:
HOUSING: NYLON, UL94 V-0, COLOR: BLACK
TERMINALS: BRASS
2) TERMINAL FINISH:
.000100/(.00254) MIN. MATTE TIN OVER
.000050/(.00127) MIN. NICKEL OVERALL.
3) PRODUCT SPECIFICATION: PS-45558-001
4) PACKAGING: PER PK-5569-002
5) PARTS MATE WITH MINI-FIT JR. RECEPTACLE 455590002.
6) PARTS ARE NOT DESIGNED FOR CURRENT SHARING.
7) FULL RIB INDICATES CIRCUIT NO. 1.
8) PARTS ARE NOT TO BE MATED OR UNMATED WHILE CIRCUITS ARE LIVE.
9) DISCOLORATION IN THE BANDOLIER CARRIER AREA OF THE PIN IS INHERENT TO THE PLATING PROCESS AND IS DUE TO THE MASKING EFFECT OF THE CARRIER. THIS DISCOLORATION IS IN A NON-FUNCTIONAL AREA OF THE PIN AND WILL NOT AFFECT THE PERFORMANCE OF THE HEADER ASSEMBLY.
10) PART CONFORMS TO CLASS "B" REQUIREMENTS OF COSMETIC SPECIFICATION PS-45499-002.
11 FORMING MARKS ARE ACCEPTABLE.

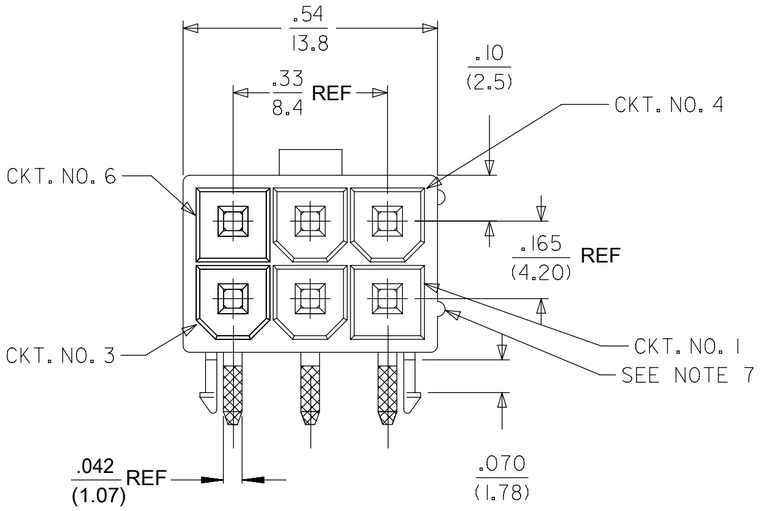

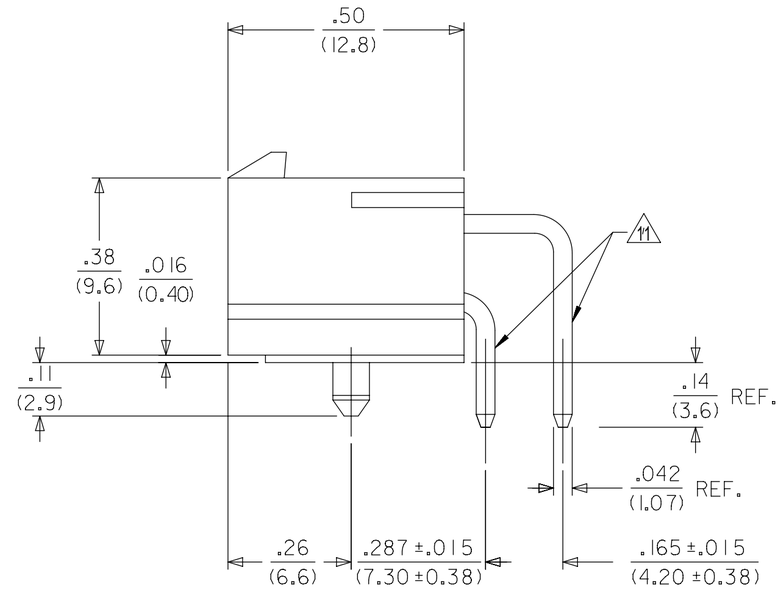

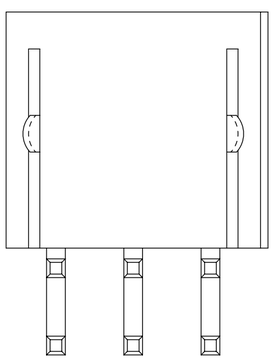

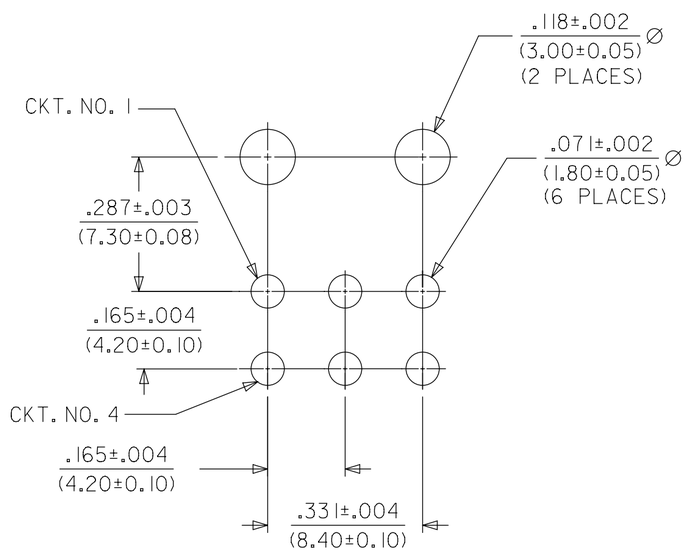

RECOMMENDED HOLE LAYOUT FOR
.070/(1.78) MAX. THICK P.C. BOARD.
VIEWED FROM COMPONENT SIDE OF BOARD.

QUALITY SYMBOLS	
EA	= 0
EC	= 0
EP	= 0
▼	= 0
C	= 0
☒	= 0
■	= 0
▽	= 0

THIS DRAWING CONTAINS INFORMATION THAT IS PROPRIETARY TO MOLEX ELECTRONIC TECHNOLOGIES, LLC AND SHOULD NOT BE USED WITHOUT WRITTEN PERMISSION

CONVERT TO NX
EC NO: 103343 2016/03/07
DRWN: CSLAFTER 2016/03/22
CHK'D: JBELL 2016/03/30
APPR: FSMITH
REV B2

GENERAL TOLERANCES (UNLESS SPECIFIED)

	MM	INCH
4 PLACES	±	±
3 PLACES	±	± .010
2 PLACES	± 0.25	± .015
1 PLACES	± 0.38	±
0 PLACES	±	±

ANGULAR TOL ± 1/2

DRAFT WHERE APPLICABLE MUST REMAIN WITHIN DIMENSIONS

DIMENSION UNITS: IN/MM
SCALE: 4:1
DRWN BY: GEP DATE: 2003/11/11
CHK'D BY: YLM DATE: 2003/11/11
APPR BY: FSMITH DATE: 2012/02/02
DRAWING SIZE: C
THIRD ANGLE PROJECTION

molex®

6 CKT R/A HEADER ASSY
SPECIAL POLARIZATION MINI-FIT JR. SERIES

PRODUCT CUSTOMER DRAWING

SERIES	MATERIAL NUMBER	CUSTOMER
45558	SEE CHART	GENERAL MARKET

DOCUMENT NUMBER	DOC TYPE	DOC PART	SHEET NUMBER
SD-45558-001	PSD	000	1 OF 1

RELEASE STATUS		RELEASE DATE	22:55:57

FORMAT: Eng-lega-master-tb-prod-C
REVISION: B
DATE: 2015/11/19