Excellent Integrated System Limited

Stocking Distributor

Click to view price, real time Inventory, Delivery & Lifecycle Information:

Molex Connector Corporation
0386006612

For any questions, you can email us directly:
sales@integrated-circuit.com

SD-38600-001

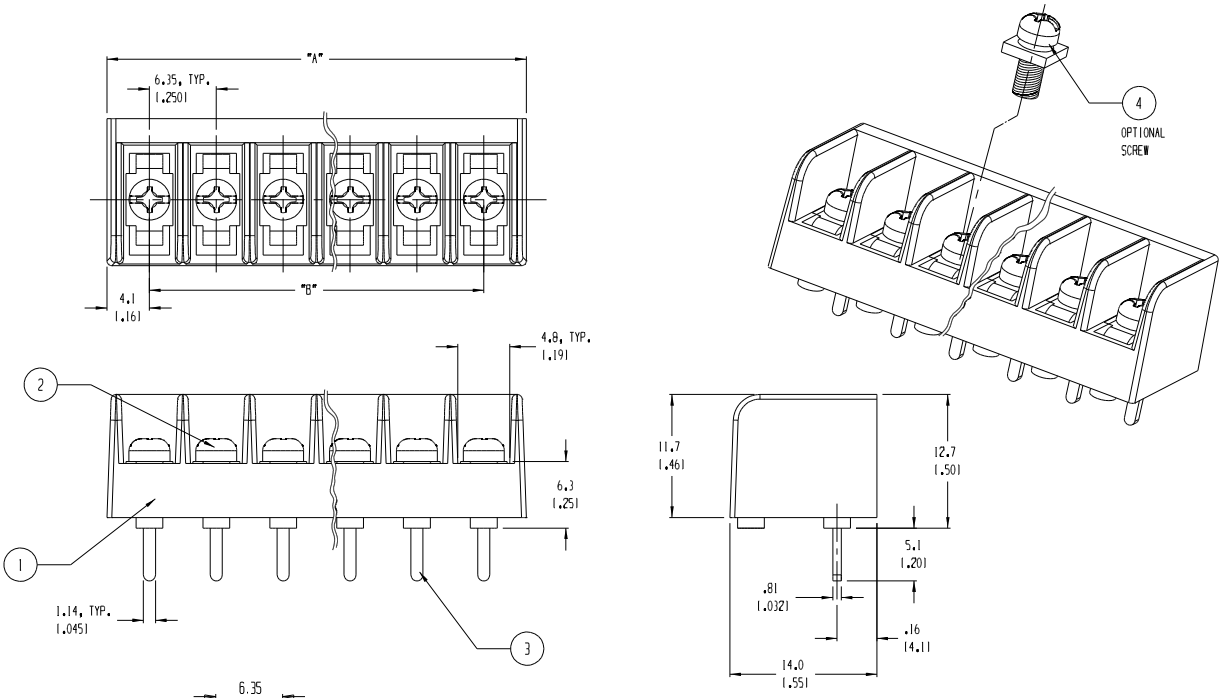

NOTES:

1. MATERIAL: SEE TABLE
2. FINISHES: SEE TABLE
3. PRODUCT SPECIFICATION: NOT REQUIRED
4. PACKAGING: NOT REQUIRED
5. MATES WITH: NONE
6. "XX" REFERS TO THE NUMBER OF CIRCUITS.

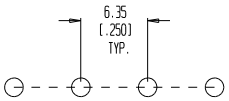

RECOMENDED PTH

ITEM	QTY.	DESCRIPTION	MATERIAL	FINISH
4	XX	#3-48 SCREW W/WASHER	STEEL	Zn CLEAR CHROMATE
3	XX	TERMINAL	BRASS	TIN
2	XX	#3-48 SCREW	BRASS	NICKEL
1	1	SR BTS	THERMOPLASTIC	BLACK

EC NO. ECN 3836
DRAWN: JF 10-27-04
CH'K:
APPR:
DESCRIPTION
REV C

QUALITY SYMBOLS
MAJOR
CRITICAL
SPC

GENERAL TOLERANCES: (UNLESS SPECIFIED)

	mm	INCH
4 PLACES		±.0015
3 PLACES	±.038	±.005
2 PLACES	±.13	±.01
1 PLACE	±.3	
ANGULAR:	±2°	

DRAFT WHERE APPLICABLE MUST REMAIN WITHIN DIMENSIONS

SCALE 3:1
DESIGN UNITS ☐ mm ☒ INCH
THIRD ANGLE PROJECTION
DRAWN BY & DATE W. HOWARD 10-7-03
CHECKED BY & DATE R. KEMP 10-9-03
APPROVED BY & DATE P. WALTZ 10-10-03
CAD FILENAME 605XX-C
MATERIAL NO. SEE CHART
DRAWING NO. SD-38600-001
SHEET NO. 1 OF 2
SIZE B

PROJECT NO.
DIMENSIONS: ☒ mm/INCH ☐ INCH/mm ☐ mm ONLY
SHT REV
REVISE ON CAD ONLY

TITLE: SR BTS, ASSY

MOLEX INCORPORATED

THIS DRAWING CONTAINS INFORMATION THAT IS PROPRIETARY TO MOLEX INCORPORATED AND SHOULD NOT BE USED WITHOUT WRITTEN PERMISSION.

SD-38600-001

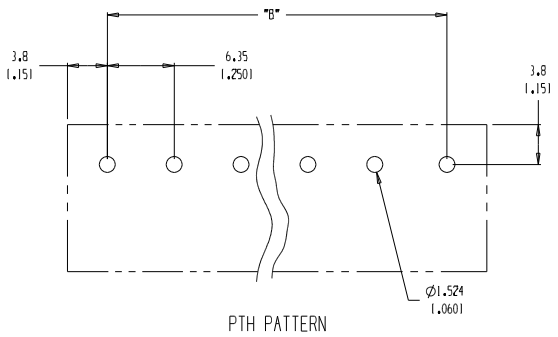

NUMBER OF CIRCUITS "XX"	DIM. "A"	DIM. "B"	MATERIAL NO. (OPT -C,-50)	MATERIAL NO. (OPT -C)	MATERIAL NO. (INSULATOR)
02	14.48 [.570]	6.35 [.250]	38600-7802	38600-6602	38608-2735
03	20.83 [.820]	12.70 [.500]	38600-7803	38600-6603	38608-2736
04	27.18 [1.070]	19.05 [.750]	38600-7804	38600-6604	38608-2737
05	33.53 [1.320]	25.40 [1.000]	38600-7805	38600-6605	38608-2738
06	39.88 [1.570]	31.75 [1.250]	38600-7806	38600-6606	38608-2739
07	46.23 [1.820]	38.10 [1.500]	38600-7807	38600-6607	38608-2740
08	52.58 [2.070]	44.45 [1.750]	38600-7808	38600-6608	38608-2741
09	58.93 [2.320]	50.80 [2.000]	38600-7809	38600-6609	38608-2742
10	65.28 [2.570]	57.15 [2.250]	38600-7810	38600-6610	38608-2743
11	71.63 [2.820]	63.50 [2.500]	38600-7811	38600-6611	38608-2744
12	77.98 [3.070]	69.85 [2.750]	38600-7812	38600-6612	38608-2745
13	84.33 [3.320]	76.20 [3.000]	38600-7813	38600-6613	38608-2746
14	90.68 [3.570]	82.55 [3.250]	38600-7814	38600-6614	38608-2747
15	97.03 [3.820]	88.90 [3.500]	38600-7815	38600-6615	38608-2748
16	103.38 [4.070]	95.25 [3.750]	38600-7816	38600-6616	38608-2749
17	109.73 [4.320]	101.60 [4.000]	38600-7817	38600-6617	38608-2750
18	116.08 [4.570]	107.95 [4.250]	38600-7818	38600-6619	38608-2751
19	122.43 [4.820]	114.30 [4.500]	38600-7819	38600-6619	38608-2752
20	128.78 [5.070]	120.65 [4.750]	38600-7820	38600-6620	38608-2753
21	135.13 [5.320]	127.00 [5.000]	38600-7821	38600-6621	38608-2754
22	141.48 [5.570]	133.35 [5.250]	38600-7822	38600-6622	38608-2755
23	147.83 [5.820]	139.70 [5.500]	38600-7823	38600-6623	38608-2756
24	154.18 [6.070]	146.05 [5.750]	38600-7824	38600-6624	38608-2757
25	160.53 [6.320]	152.40 [6.000]	38600-7825	38600-6625	38608-2758
26	166.88 [6.570]	158.75 [6.250]	38600-7826	38600-6626	38608-2759
27	173.23 [6.820]	165.10 [6.500]	38600-7827	38600-6627	38608-2760
28	179.58 [7.070]	171.45 [6.750]	38600-7828	38600-6628	38608-2761
29	185.93 [7.320]	177.80 [7.000]	38600-7829	38600-6629	38608-2762
30	192.28 [7.570]	184.15 [7.250]	38600-7830	38600-6630	38608-2763
31	198.63 [7.820]	190.50 [7.500]	38600-7831	38600-6631	38608-2764
32	204.98 [8.070]	196.85 [7.750]	38600-7832	38600-6632	38608-2765

SEE SHEET ONE
EC NO.
DRWN:
CH'K:
APPR:
REV
DESCRIPTION

QUALITY SYMBOLS
MAJOR
CRITICAL
SPC

GENERAL TOLERANCES: (UNLESS SPECIFIED)

	mm	INCH
4 PLACES		±.0015
3 PLACES	±.038	±.005
2 PLACES	±.13	±.01
1 PLACE	±.3	
ANGULAR: ±2°		

DRAFT WHERE APPLICABLE MUST REMAIN WITHIN DIMENSIONS

SCALE 3:1
DESIGN UNITS ☐ mm ☒ INCH
THIRD ANGLE PROJECTION

DRAWN BY & DATE W. HOWARD 10-7-03
CHECKED BY & DATE R. KEMP 10-9-03
APPROVED BY & DATE P. WALTZ 10-10-03
CAD FILENAME 605XX-C

PROJECT NO.
DIMENSIONS: ☒ mm/INCH ☐ INCH/mm ☐ mm ONLY
SHT REV
REVISE ON CAD ONLY

TITLE: SR BTS, ASSY

MOLEX INCORPORATED

MATERIAL NO. SEE CHART
DRAWING NO. SD-38600-001
SHEET NO. 2 OF 2
SIZE B

THIS DRAWING CONTAINS INFORMATION THAT IS PROPRIETARY TO MOLEX INCORPORATED AND SHOULD NOT BE USED WITHOUT WRITTEN PERMISSION.