Excellent Integrated System Limited

Stocking Distributor

Click to view price, real time Inventory, Delivery & Lifecycle Information:

Molex Connector Corporation
0386307805

For any questions, you can email us directly:
sales@integrated-circuit.com

38630

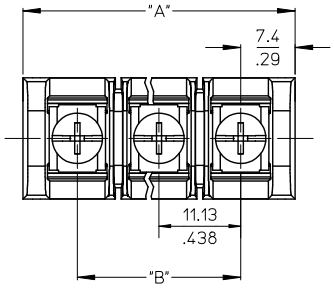

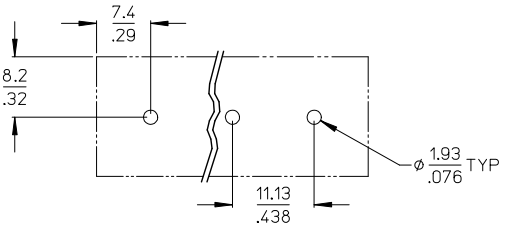

RECOMMENDED PLATED THRU HOLE PATTERN

MATERIAL NUMBER (STD.)	MATERIAL NUMBER (-56)	MATERIAL NUMBER (-50)	NO. OF CIRCUITS	A		B	
386306602	386390109	386307802	2	25.9	(1.02)	11.13	(.438)
386306603	386390110	386307803	3	37.1	(1.46)	22.22	(.875)
386306604	386390111	386307804	4	48.3	(1.90)	33.35	(1.313)
386306605	386390112	386307805	5	59.2	(2.33)	44.45	(1.750)
386306606	386390113	386307806	6	70.4	(2.77)	55.57	(2.188)
386306607	386390114	386307807	7	81.5	(3.21)	66.67	(2.625)
386306608	386390115	386307808	8	92.7	(3.65)	77.80	(3.063)
386306609	386390116	386307809	9	103.6	(4.08)	88.90	(3.500)
386306610	386390117	386307810	10	114.8	(4.52)	100.03	(3.938)
386306611	386390118	386307811	11	125.9	(4.96)	111.13	(4.375)
386306612	386390119	386307812	12	137.2	(5.40)	122.25	(4.813)
386306613	386390120	386307813	13	148.1	(5.83)	133.35	(5.250)
386306614	386390121	386307814	14	159.3	(6.27)	144.45	(5.687)
386306615	386390122	386307815	15	170.4	(6.71)	155.58	(6.125)
386306616	386390123	386307816	16	181.6	(7.15)	166.70	(6.563)

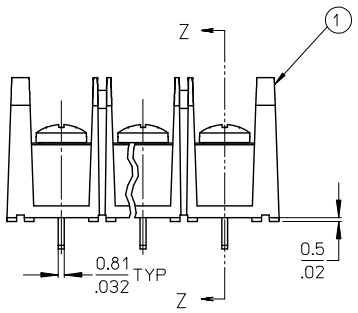

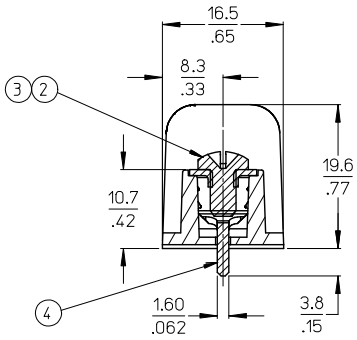

SECTION Z-Z

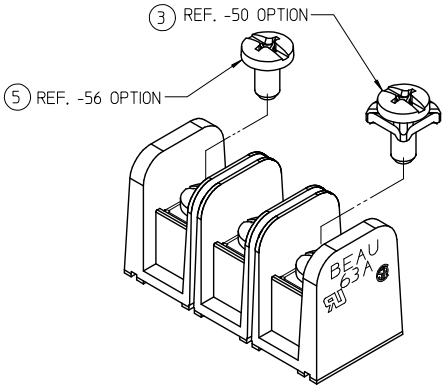

NOTES:

1. MATERIAL: SEE TABLE
2. FINISHES: SEE TABLE
3. 'XX' REFERS TO QTY. OF CIRCUITS.
4. ASSEMBLY IS ROHS COMPLIANT.

D

ITEM	QTY.	DESCRIPTION	MATERIAL	FINISH
5	XX	SCREW #6-32X.250 BHD, PH-SL STAINLESS (-56 OPT)	STAINLESS STL	PASSIVATE
4	XX	TERMINAL, PC (SHORT)	BRASS	TIN PLATE
3	XX	SCREW/WSHR #6-32X.250 PAN, PH-SL (-50)	STEEL	ZN. CLEAR CHROMATE
2	XX	SCREW #6-32X.250 BHD, PH-SL (STD)	STEEL	ZN. CLEAR CHROMATE
1	1	BARRIER TERMINAL STRIP	POLYESTER (PBT)	BLACK

REV	DESCRIPTION
D	CHG SS SCREW DRIVE RECESS EC NO: IPG2013-0364 DRWN:CLYORK 2010/08/16 CHKD:JMACNEIL 2012/09/12 APPR:JMACNEIL 2012/11/05

QUALITY SYMBOLS
▼=0
▽=0

GENERAL TOLERANCES (UNLESS SPECIFIED)

	mm	INCH
4 PLACES	± ---	± ---
3 PLACES	± ---	± .005
2 PLACES	± 0.13	± .01
1 PLACE	± 0.3	± ---
ANGULAR ± 2 °		

DRAFT WHERE APPLICABLE MUST REMAIN WITHIN DIMENSIONS

DIMENSION STYLE: MM/IN
SCALE: 2:1
DESIGN UNITS: INCH
THIRD ANGLE PROJECTION

		DATE
DRAWN BY	R. STONE	2003/03/25
CHECKED BY	R. KEMP	2003/03/27
APPROVED BY	P. WALTZ	2003/03/28

TITLE: 11.13/.438" PCB BTS 600V NO MTG ENDS, STD LENGTH (63A5XX-C)

MOLEX INCORPORATED

MATERIAL NO.: SEE CHART
DOCUMENT NO.: SD-38630-008
SHEET NO.: 1 OF 1
SIZE: B

THIS DRAWING CONTAINS INFORMATION THAT IS PROPRIETARY TO MOLEX INCORPORATED AND SHOULD NOT BE USED WITHOUT WRITTEN PERMISSION

tb_frame_B_P_ME_T
Rev. E 2006/04/15