Excellent Integrated System Limited

Stocking Distributor

Click to view price, real time Inventory, Delivery & Lifecycle Information:

Molex Connector Corporation
0387244803

For any questions, you can email us directly:
sales@integrated-circuit.com

38724

QTY. OF CIRC. "XX"	DIM. "A" mm	DIM. "A" inch	DIM. "B" mm	DIM. "B" inch	DIM. "C" mm	DIM. "C" inch	DIM. "D" mm	DIM. "D" inch	ASSEMBLY MATERIAL # (STANDARD)	ASSEMBLY MATERIAL # (-50 OPT.) B
02	36.2	1.43	9.53	.375	28.58	1.125	21.1	.83	387244002	387244802
03	45.7	1.80	19.05	.750	38.10	1.500	30.7	1.21	387244003	387244803
04	55.2	2.18	28.58	1.125	47.63	1.875	40.2	1.58	387244004	387244804
05	64.8	2.55	38.10	1.500	57.15	2.250	49.7	1.96	387244005	387244805
06	74.3	2.93	47.63	1.875	66.68	2.625	59.2	2.33	387244006	387244806
07	83.8	3.30	57.15	2.250	76.20	3.000	68.8	2.71	387244007	387244807
08	93.3	3.68	66.68	2.625	85.73	3.375	78.3	3.08	387244008	387244808
09	102.9	4.05	76.20	3.000	95.25	3.750	87.8	3.46	387244009	387244809
10	112.4	4.43	85.73	3.375	104.78	4.125	97.3	3.83	387244010	387244810
11	121.9	4.80	95.25	3.750	114.30	4.500	106.9	4.21	387244011	387244811
12	131.4	5.18	104.78	4.125	123.83	4.875	116.4	4.58	387244012	387244812
13	141.0	5.55	114.30	4.500	133.35	5.250	125.9	4.96	387244013	387244813
14	150.5	5.93	123.83	4.875	142.88	5.625	135.4	5.33	387244014	387244814
15	160.0	6.30	133.35	5.250	152.40	6.000	145.0	5.71	387244015	387244815
16	169.5	6.68	142.88	5.625	161.93	6.375	154.5	6.08	387244016	387244816

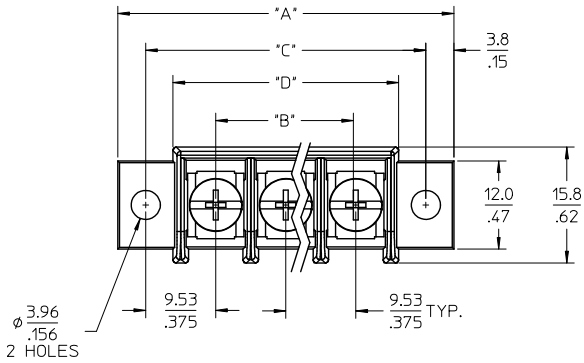

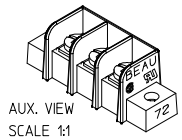

AUX. VIEW
SCALE 1:1
3 CIRCUIT SHOWN

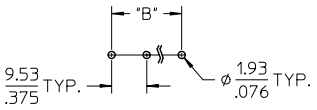

PTH PATTERN
SCALE 1 : 1

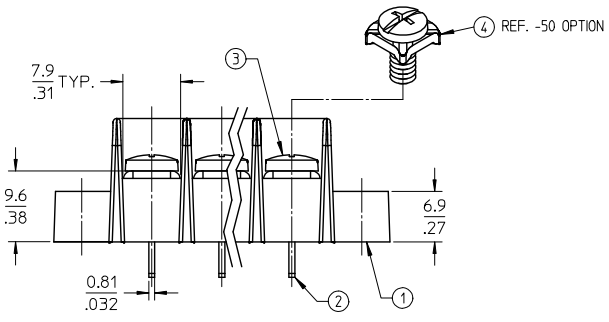

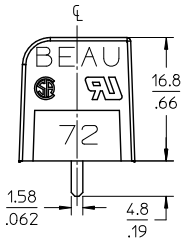

NOTES:

1. MATERIAL: SEE TABLE
2. FINISHES: SEE TABLE
3. PRODUCT SPECIFICATION: NOT REQUIRED
4. "XX" REFERS TO THE QUANTITY OF CIRCUITS
5. ROHS COMPLIANT

ITEM	QTY.	DESCRIPTION	MATERIAL	FINISH
4	XX	SCREW W/WASHER, #6-32X.250, PANHD, PH-SL	STEEL	ZN, CLEAR CHROMATE
3	XX	SCREW, #6-32X.250, BHD, PHIL-SLOT	STEEL	ZN, CLEAR CHROMATE
2	XX	TERMINAL, PC	BRASS	TIN PLATE
1	1	INSULATOR, SR, CS, MOLDED MTG.	POLYESTER (PBT)	BLACK

REV | DESCRIPTION
B | ADD -50 PART NUMS. EC NO: WNA2009-0426 DRWN:JENCINAS 2009/02/06 CHK'D:CYORK 2009/02/10 APPR:JMACNEIL 2009/02/10

QUALITY SYMBOLS
▼=0
▽=0

GENERAL TOLERANCES (UNLESS SPECIFIED)

	mm	INCH
4 PLACES	± ---	± ---
3 PLACES	± ---	± .005
2 PLACES	± 0.13	± .01
1 PLACE	± 0.3	± ---
ANGULAR ± 2 °		

DRAFT WHERE APPLICABLE MUST REMAIN WITHIN DIMENSIONS

DIMENSION STYLE: MM/IN
SCALE: 2:1
DESIGN UNITS: INCH
THIRD ANGLE PROJECTION

DRAWN BY: C. YORK DATE: 2005/06/07
CHECKED BY: G. ROBERTSON DATE: 2005/06/13
APPROVED BY: G. ROBERTSON DATE: 2005/06/13

TITLE: 9.53MM [.375"] SR BTS, PC ASSY, CLOSED SIDE (72R5XX)

MOLEX INCORPORATED

MATERIAL NO.: SEE CHART
DOCUMENT NO.: SD-38724-001
SHEET NO.: 1 OF 1
SIZE: B

THIS DRAWING CONTAINS INFORMATION THAT IS PROPRIETARY TO MOLEX INCORPORATED AND SHOULD NOT BE USED WITHOUT WRITTEN PERMISSION

tb_frame_B_P_ME_T
Rev. E 2006/04/15