Excellent Integrated System Limited

Stocking Distributor

Click to view price, real time Inventory, Delivery & Lifecycle Information:

Digi International
101-0404

For any questions, you can email us directly:
sales@integrated-circuit.com

RABBIT

PRODUCT MANUAL

RabbitCore RCM2000

C-Programmable Module

User's Manual

019–0077 • 090417–K

RabbitCore RCM2000 User's Manual

Part Number 019-0077 • 090417–K • Printed in U.S.A.

©2001–2009 Digi International Inc. • All rights reserved.

No part of the contents of this manual may be reproduced or transmitted in any form or by any means without the express written permission of Digi International.

Permission is granted to make one or more copies as long as the copyright page contained therein is included. These copies of the manuals may not be let or sold for any reason without the express written permission of Digi International.

Digi International reserves the right to make changes and improvements to its products without providing notice.

Trademarks

Rabbit and Dynamic C are registered trademarks of Digi International Inc.

Rabbit 2000 and RabbitCore are trademarks of Digi International Inc.

The latest revision of this manual is available on the Rabbit Web site, www.rabbit.com, for free, unregistered download.

Digi International Inc.

www.rabbit.com

TABLE OF CONTENTS

Chapter 1. Introduction 1
1.1 Features 1
1.2 Advantages of Using the RCM2000 2
1.3 Development and Evaluation Tools 3
1.3.1 Development Kit 3
1.3.2 Development Kit Contents 3
1.3.3 Development Software 3
1.4 How to Use This Manual 4
1.4.1 Additional Product Information 4
1.4.2 Online Documentation 4

Chapter 2. Hardware Setup 5
2.1 Connections 6
2.1.1 Alternate Power Supply Connections 8
2.2 Run a Sample Program 9
2.2.1 Troubleshooting 9
2.3 Where Do I Go From Here? 10
2.3.1 Technical Support 10

Chapter 3. Running Sample Programs 11
3.1 Sample Programs 11
3.1.1 Running Sample Program FLASHLED.C 12
3.1.1.1 Single-Stepping 13
3.1.1.2 Watch Expressions 13
3.1.1.3 Break Point 13
3.1.1.4 Editing the Program 14
3.1.1.5 Watching Variables Dynamically 14
3.1.1.6 Summary of Features 14
3.1.1.7 Cooperative Multitasking 15
3.1.1.8 Advantages of Cooperative Multitasking 17
3.1.2 Getting to Know the RCM2000 18
3.1.3 Serial Communication 21

Chapter 4. Hardware Reference 23
4.1 RCM2000 Digital Inputs and Outputs 23
4.1.1 Dedicated Inputs 27
4.1.2 Dedicated Outputs 27
4.2 Memory I/O Interface 28
4.2.1 Additional I/0 28
4.3 Serial Communication 28
4.3.1 Serial Ports 28
4.3.2 Programming Port 29
4.4 Serial Programming Cable 30
4.4.1 Changing Between Program Mode and Run Mode 30
4.4.2 Standalone Operation of the RCM2000 31

4.5 Other Hardware 32
4.5.1 Clock Doubler 32
4.5.2 Spectrum Spreader 33
4.6 Memory 34
4.6.1 SRAM 34
4.6.2 Flash EPROM 34
4.6.3 Dynamic C BIOS Source Files 34

Chapter 5. Software Reference 35
5.1 More About Dynamic C 35
5.1.1 Using Dynamic C 36
5.2 I/O 38
5.2.1 PCLK Output 38
5.3 Serial Communication Drivers 39
5.4 Upgrading Dynamic C 40
5.4.1 Extras 40

Appendix A. Specifications 41
A.1 Electrical and Mechanical Specifications 42
A.1.1 Headers 45
A.2 Bus Loading 46
A.3 Rabbit 2000 DC Characteristics 48
A.4 I/O Buffer Sourcing and Sinking Limit 49
A.5 Conformal Coating 50
A.6 Jumper Configurations 51

Appendix B. Prototyping Board 53
B.1 Overview of the Prototyping Board 54
B.2 Mechanical Dimensions and Layout 55
B.3 Power Supply 57
B.4 Using the Prototyping Board 58
B.4.1 Adding Other Components 61

Appendix C. Power Management 63
C.1 Power Supplies 63
C.1.1 Batteries and External Battery Connections 63
C.1.2 Battery-Backup Circuit 64
C.1.3 Power to VRAM Switch 65
C.1.4 Reset Generator 65
C.2 Chip Select Circuit 66

Appendix D. Sample Circuits 67
D.1 RS-232/RS-485 Serial Communication 68
D.2 Keypad and LCD Connections 69
D.3 LCD Connections 70
D.4 External Memory 71
D.5 Simple D/A Converter 72

Index 73

Schematics 75

1. INTRODUCTION

The RabbitCore RCM2000 series is a family of microprocessor modules designed to be the heart of embedded control systems, providing an array of I/O and addressing.

Throughout this manual, the term RCM2000 refers to the complete series of RCM2000 RabbitCore modules unless other production models are referred to specifically.

The RCM2000 is a core module designed to be the heart of your own controller built around the plug-in module. Data processing is done by a Rabbit 2000 microprocessor operating at up to 25.8 MHz (RCM2000 and RCM2010).

The RCM2000 has a Rabbit 2000 microprocessor, a static RAM, a flash memory, two quartz crystals (main oscillator and timekeeping), and the circuitry necessary for reset and management of battery backup of the Rabbit 2000's internal real-time clock and the static RAM. Two 40-pin headers bring out the Rabbit 2000 I/O bus, address lines, data lines, parallel ports, and serial ports.

The RCM2000 receives its +5 V power from the user board on which it is mounted. The RCM2000 can interface will all kinds of digital devices through the user board.

The RCM2000 Development Kit comes with a Prototyping Board that can be used to demonstrate the operation of the RCM2000 and to prototype new circuits.

1.1 Features

- Small size: 1.90" × 2.30" (48.3 mm × 58.4 mm)
- Microprocessor: Rabbit 2000 running at 25.8 MHz (RCM2000 and RCM2010)
- 40 CMOS-compatible parallel I/O lines grouped in five 8-bit ports (shared with serial ports)
- 8 data lines (D0–D7)
- 13 address lines (A0–A12)
- I/0 read, write, buffer enable
- Status, watchdog and clock outputs
- Two startup mode inputs for master/slave configuration

- External reset input
- Reset output
- Five 8-bit timers, two 10-bit timers; five timers are cascadable in pairs
- 256K flash EPROM, 512K SRAM
- Real-time clock
- Watchdog supervisor
- Provision for customer-supplied backup battery via connections on header J2
- Four CMOS-compatible serial ports: maximum asynchronous baud rate of 806,400 bps, maximum synchronous baud rate of 6.45 Mbps. Two ports are configurable as clocked ports.

Appendix A, “Specifications,” provides detailed specifications for the RCM2000.

Three versions of the RCM2000 are available. Their standard features are summarized in Table 1.

Table 1. RCM2000 Models and Features

Model	Features
RCM2000	Full-featured RCM2000 module with 25.8 MHz clock, 256K flash memory, and 512K SRAM
RCM2010	RCM2000 with 25.8 MHz clock and 128K SRAM
RCM2020	RCM2000 with 18.432 MHz clock and 128K SRAM

1.2 Advantages of Using the RCM2000

- Fast design time for your project since the basic core has already been designed and built.
- Competitive pricing compared with purchasing and assembling the individual components.
- Easy programming, including production installation of a program.
- Generous memory size allows large C programs with tens of thousands of lines of code, and substantial data storage.

1.3 Development and Evaluation Tools

1.3.1 Development Kit

A complete Development Kit, including a Prototyping Board and Dynamic C development software, is available for the RCM2000. The Development Kit puts together the essentials you need to design an embedded microprocessor-based system rapidly and efficiently.

1.3.2 Development Kit Contents

The RCM2000 Development Kit contains the following items:

- RCM2020 module with 256K flash memory and 128K SRAM.
- RCM2000 Prototyping Board with accessory hardware and components.
- Universal AC adapter, 12 V DC, 1 A (includes Canada/Japan/U.S., Australia/N.Z., U.K., and European style plugs).
- 10-pin header to DB9 programming cable with integrated level-matching circuitry.
- ***Dynamic C*** CD-ROM, with complete product documentation on disk.
- ***Getting Started*** instructions.
- Registration card.

1.3.3 Development Software

The RCM2000 modules use the Dynamic C development environment for rapid creation and debugging of runtime applications. Dynamic C provides a complete development environment with integrated editor, compiler and source-level debugger. It interfaces directly with the target system, eliminating the need for complex and unreliable in-circuit emulators.

1.4 How to Use This Manual

This user's manual is intended to give users detailed information on the RCM2000 module. It does not contain detailed information on the Dynamic C development environment.

1.4.1 Additional Product Information

In addition to the product-specific information contained in the ***RabbitCore RCM2000 User's Manual*** (this manual), several higher level reference manuals are provided in HTML and PDF form on the accompanying CD-ROM. Advanced users will find these references valuable in developing systems based on the RCM3100 modules:

- ***Dynamic C User's Manual***
- ***Dynamic C Function Reference Manual***
- ***Rabbit 2000 Microprocessor User's Manual***

1.4.2 Online Documentation

The online documentation is installed along with Dynamic C, and an icon for the documentation menu is placed on the workstation's desktop. Double-click this icon to reach the menu. If the icon is missing, use your browser to find and load **default.htm** in the **docs** folder, found in the Dynamic C installation folder.

The latest versions of all documents are always available for free, unregistered download from our Web sites as well.

2. HARDWARE SETUP

This chapter describes the RCM2000 hardware in more detail, and explains how to set up the accompanying Prototyping Board.

NOTE: This chapter (and this manual) assume that you have the RabbitCore RCM2000 Development Kit. If you purchased an RCM2000 module by itself, you will have to adapt the information in this chapter and elsewhere to your test and development setup.

2.1 Connections

1. Attach RCM2000 to Prototyping Board

Turn the RCM2000 so that the Rabbit 2000 microprocessor is facing as shown below. Plug RCM2000 headers J1 and J2 on the bottom side of the RCM2000 into the sockets of headers J1 and J3 on the Prototyping Board.

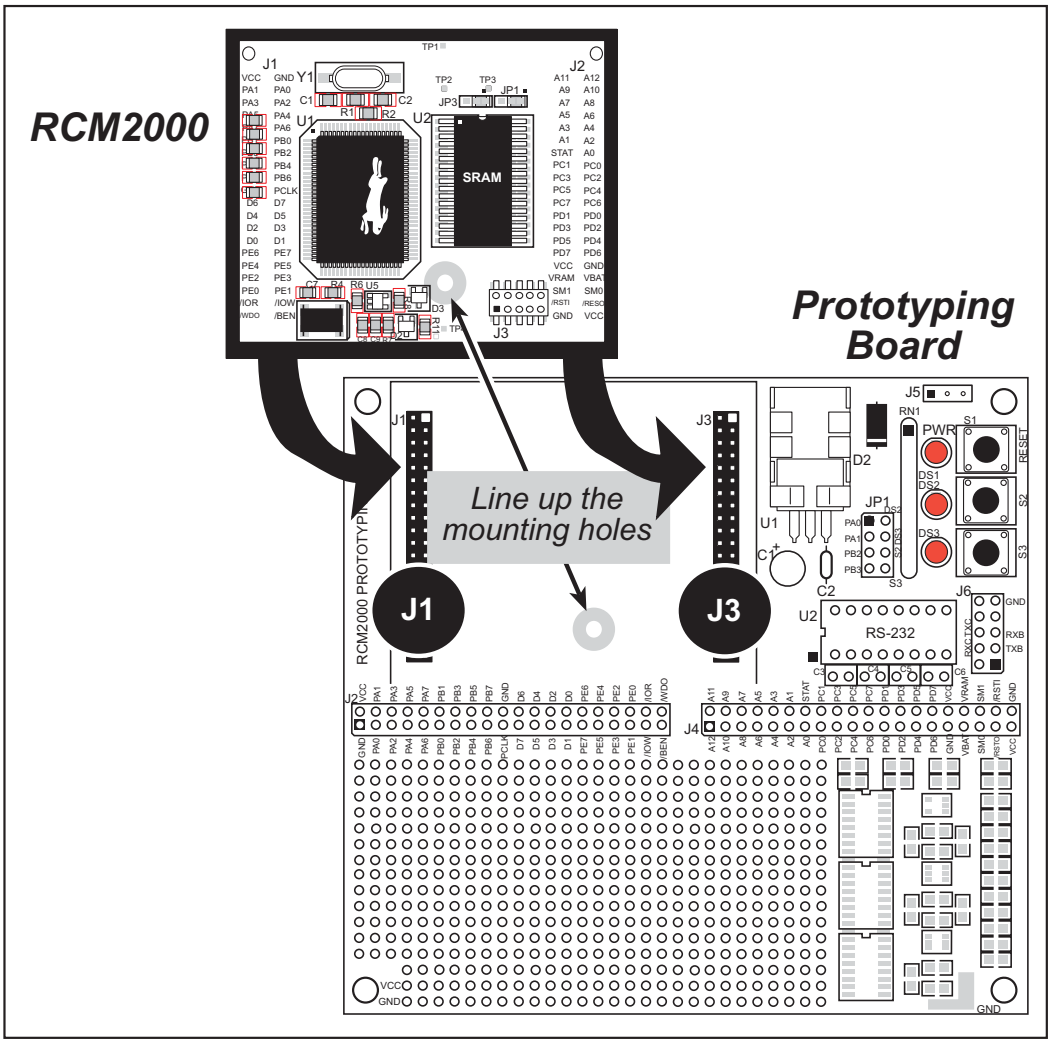

Figure 1. Attaching RCM2000 to Prototyping Board

NOTE: It is important that you line up the pins on the RCM2000 headers J1 and J2 exactly with the corresponding pins of header sockets J1 and J3 on the Prototyping Board. The header pins may become bent or damaged if the pin alignment is offset, and the RCM2000 will not work.

2. Connect RCM2000 to PC

Connect the 10-pin connector of the programming cable labeled **PROG** to header J3 on the RCM2000 module as shown in Figure 2 below. Be sure to orient the red edge of the cable towards pin 1 of the connector. (Do not use the **DIAG** connector, which is used for a normal serial connection.)

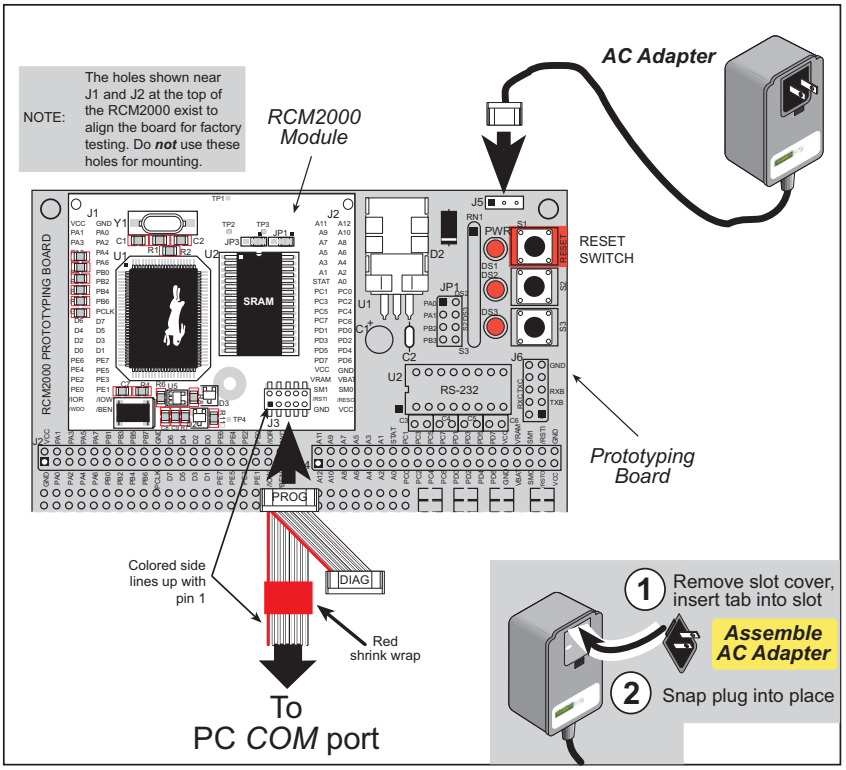

Figure 2. RCM2000 Power and Programming Connections

NOTE: Some PCs now come equipped only with a USB port. It may be possible to use an RS-232/USB converter (Part No. 20-151-0178) with the programming cable supplied with the RCM2000 Development Kit. Note that not all RS-232/USB converters work with Dynamic C.

3. Power Supply Connections

When all other connections have been made, you can connect power to the Prototyping Board.

First, prepare the AC adapter for the country where it will be used by selecting the plug. The RCM2000 Development Kit presently includes Canada/Japan/U.S., Australia/N.Z., U.K., and European style plugs. Snap in the top of the plug assembly into the slot at the top of the AC adapter as shown in Figure 2, then press down on the spring-loaded clip below the plug assembly to allow the plug assembly to click into place.

Connect the AC adapter to 3-pin header J5 on the Prototyping Board. The connector may be attached either way as long as it is not offset to one side.

Plug in the AC adapter. The power LED on the Prototyping Board should light up. The RCM2000 and the Prototyping Board are now ready to be used.

NOTE: A RESET button is provided on the Prototyping Board to allow a hardware reset.

To power down the Prototyping Board, unplug the power connector from J5. You should disconnect power before making any circuit adjustments in the prototyping area, changing any connections to the board, or removing the RCM2020 from the Prototyping Board.

2.1.1 Alternate Power Supply Connections

Development kits sold outside North America before 2009 included a header connector that could be connected to 3-pin header J5 on the Prototyping Board. The red and black wires from the connector could then be connected to the positive and negative connections on your power supply. The power supply should deliver 8 V–24 V DC at 8 W.

2.2 Run a Sample Program

Once the RCM2000 is connected as described in the preceding pages, start Dynamic C by double-clicking on the Dynamic C icon on your desktop or in your **Start** menu. Dynamic C uses the serial port specified during installation.

If you are using a USB port to connect your computer to the RCM2000 module, choose **Options > Project Options** and select "Use USB to Serial Converter" under the **Communications** tab, then click **OK**.

Find the file `PONG.C`, which is in the Dynamic C `SAMPLES` folder. To run the program, open it with the **File** menu (if it is not still open), then compile and run it by pressing **F9** or by selecting **Run** in the **Run** menu. The **STDIO** window will open and will display a small square bouncing around in a box.

2.2.1 Troubleshooting

If Dynamic C cannot find the target system (error message `"No Rabbit Processor Detected."`):

- Check that the RCM2000 is powered correctly — the red power LED on the Prototyping Board should be lit when the RCM2000 is mounted on the Prototyping Board and the AC adapter is plugged in.
- Check both ends of the programming cable to ensure that they are firmly plugged into the PC and the **PROG** connector, not the **DIAG** connector, is plugged in to the programming port on the RCM2000 with the marked (colored) edge of the programming cable towards pin 1 of the programming header.
- Ensure that the RCM2000 module is firmly and correctly installed in its connectors on the Prototyping Board.
- Dynamic C uses the COM port specified during installation. Select a different COM port within Dynamic C. From the **Options** menu, select **Project Options**, then select **Communications**. Select another COM port from the list, then click OK. Press **<Ctrl-Y>** to force Dynamic C to recompile the BIOS. If Dynamic C still reports it is unable to locate the target system, repeat the above steps until you locate the COM port used by the programming cable.

If Dynamic C appears to compile the BIOS successfully, but you then receive a communication error message when you compile and load the sample program, it is possible that your PC cannot handle the higher program-loading baud rate. Try changing the maximum download rate to a slower baud rate as follows.

- Locate the **Serial Options** dialog in the Dynamic C **Options > Project Options > Communications** menu. Select a slower Max download baud rate.

If a program compiles and loads, but then loses target communication before you can begin debugging, it is possible that your PC cannot handle the default debugging baud rate. Try lowering the debugging baud rate as follows.

- Locate the **Serial Options** dialog in the Dynamic C **Options > Project Options > Communications** menu. Choose a lower debug baud rate.

2.3 Where Do I Go From Here?

If everything appears to be working, we recommend the following sequence of action:

1. Run all of the sample programs described in Chapter 3 to get a basic familiarity with Dynamic C and the RCM2000's capabilities.
2. For further development, refer to the ***RabbitCore RCM2000 User's Manual*** for details of the module's hardware and software components.

   A documentation icon should have been installed on your workstation's desktop; click on it to reach the documentation menu. You can create a new desktop icon that points to **default.htm** in the **docs** folder in the Dynamic C installation folder.
3. For advanced development topics, refer to the ***Dynamic C User's Manual***, also in the online documentation set.

2.3.1 Technical Support

NOTE: If you purchased your RCM2000 through a distributor or through a Rabbit partner, contact the distributor or partner first for technical support.

- Use the Dynamic C **Help** menu to get further assistance with Dynamic C.
- Check the Rabbit Technical Bulletin Board and forums at www.rabbit.com/support/bb/ and at www.rabbit.com/forums/.
- Use the Technical Support e-mail form at www.rabbit.com/support/.

3. RUNNING SAMPLE PROGRAMS

To develop and debug programs for the RCM2000 (and for all other Rabbit hardware), you must install and use Dynamic C. Dynamic C is an integrated development system for writing embedded software. It runs on an IBM-compatible PC and is designed for use with Rabbit single-board computers and other single-board computers based on the Rabbit microprocessor. Chapter 3 provides the sample programs related to the RCM2000.

3.1 Sample Programs

To help familiarize you with the RCM2000 modules, Dynamic C includes several sample programs in the Dynamic C `SAMPLES\RCM2000` directory. Loading, executing and studying these programs will give you a solid hands-on overview of the RCM2000's capabilities, as well as a quick start with Dynamic C as an application development tool. These programs are intended to serve as tutorials, but then can also be used as starting points or building blocks for your own applications.

> **NOTE:** It is assumed in this section that you have at least an elementary grasp of ANSI C. If you do not, see the introductory pages of the ***Dynamic C User's Manual*** for a suggested reading list.

Each sample program has comments that describe the purpose and function of the program.

Before running any of these sample program, make sure that your RCM2000 is connected to the Prototyping Board and to your PC as described in Section 2.1, "Connections."

To run a sample program, open it with the **File** menu (if it is not already open), then compile and run it by pressing **F9** or by selecting **Run** in the **Run** menu.

Complete information on Dynamic C is provided in the ***Dynamic C User's Manual***.

3.1.1 Running Sample Program FLASHLED.C

This sample program will be used to illustrate some of the functions of Dynamic C.

First, open the file **FLASHLED.C**, which is in the **SAMPLES/RCM2000** folder. The program will appear in a window, as shown in Figure 3 below (minus some comments). Use the mouse to place the cursor on the function name **WrPortI** in the program and type **<Ctrl-H>**. This will bring up a documentation box for the function **WrPortI**. In general, you can do this with all functions in Dynamic C libraries, including libraries you write yourself. Close the documentation box and continue.

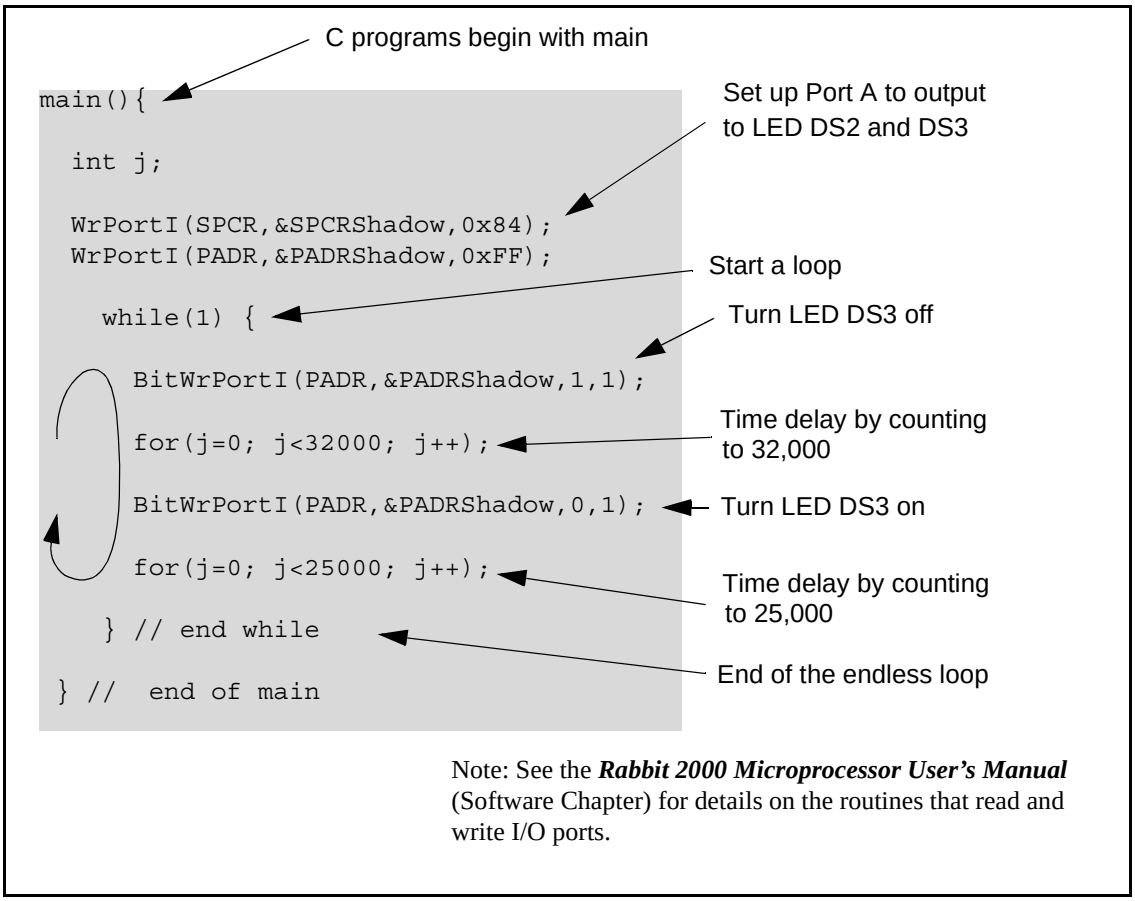

Figure 3. Sample Program FLASHLED.C

To run the program **FLASHLED.C**, open it with the **File** menu (if it is not already open), then compile and run it by pressing **F9** or by selecting **Run** in the **Run** menu. The LED on the Prototyping Board should start flashing if everything went well. If this doesn't work review the following points.

- The target should be ready, which is indicated by the message "BIOS successfully compiled..." If you did not receive this message or you get a communication error, recompile the BIOS by typing **<Ctrl-Y>** or select **Recompile BIOS** from the **Compile** menu.

- A message reports “No Rabbit Processor Detected” in cases where the RCM2000 and the Prototyping Board are not connected together, the wall transformer is not connected, or is not plugged in. (The red power LED lights whenever power is connected.)
- The programming cable must be connected to the RCM2000. (The colored wire on the programming cable is closest to pin 1 on header J3 on the RCM2000, as shown in Figure 2.) The other end of the programming cable must be connected to the PC serial port. The COM port specified in the Dynamic C **Options** menu must be the same as the one the programming cable is connected to.
- To check if you have the correct serial port, select **Compile**, then **Compile BIOS**, or type **<Ctrl-Y>**. If the “BIOS successfully compiled …” message does not display, try a different serial port using the Dynamic C **Options** menu until you find the serial port you are plugged into. Don’t change anything in this menu except the COM number. The baud rate should be 115,200 bps and the stop bits should be 1.

3.1.1.1 Single-Stepping

Compile or re-compile `FLASHLED.C` by clicking the **Compile** button on the task bar. The program will compile and the screen will come up with a highlighted character (green) at the first executable statement of the program. Use the **F8** key to single-step. Each time the **F8** key is pressed, the cursor will advance one statement. When you get to the `for(j=0, j< ...` statement, it becomes impractical to single-step further because you would have to press **F8** thousands of times. We will use this statement to illustrate watch expressions.

3.1.1.2 Watch Expressions

Type **<Ctrl-W>** or chose **Add/Del Watch Expression** in the **Inspect** menu. A box will come up. Type the lower case letter j and click on *add to top* and *close*. Now continue single-stepping with **F8**. Each time you step, the watch expression (`j`) will be evaluated and printed in the watch window. Note how the value of `j` advances when the statement `j++` is executed.

3.1.1.3 Break Point

Move the cursor to the start of the statement:

```
for(j=0; j<25000; j++);
```

To set a break point on this statement, type **F2** or select **Toggle Breakpoint** from the **Run** menu. A red highlight will appear on the first character of the statement. To get the program running at full speed, type **F9** or select **Run** on the **Run** menu. The program will advance until it hits the break point. Then the break point will start flashing and show both red and green colors. Note that LED DS3 is now solidly turned on. This is because we have passed the statement turning on LED DS3. Note that `j` in the watch window has the value 32000. This is because the loop above terminated when `j` reached 32000.

To remove the break point, type **F2** or select **Toggle Breakpoint** on the **Run** menu. To continue program execution, type **F9** or select **Run** from the **Run** menu. Now the LED should be flashing again since the program is running at full speed.

You can set break points while the program is running by positioning the cursor to a statement and using the **F2** key. If the execution thread hits the break point, a break point will take place.You can toggle the break point off with the **F2** key and continue execution with the **F9** key. Try this a few times to get the feel of things.

3.1.1.4 Editing the Program

Click on the **Edit** box on the task bar. This will set Dynamic C into the edit mode so that you can change the program. Use the **Save as** choice on the **File** menu to save the file with a new name so as not to change the demo program. Save the file as `MYTEST.C`. Now change the number 25000 in the `for (..` statement to 10000. Then use the **F9** key to recompile and run the program. The LED will start flashing, but it will flash much faster than before because you have changed the loop counter terminal value from 25000 to 10000.

3.1.1.5 Watching Variables Dynamically

Go back to edit mode (select edit) and load the program `FLASHLED2.C` using the **File** menu **Open** command. This program is the same as the first program, except that a variable `k` has been added along with a statement to increment `k` each time around the endless loop. The statement:

```
runwatch();
```

has been added. This is a debugging statement that makes it possible to view variables while the program is running.

Use the **F9** key to compile and run `FLASHLED2.C`. Now type **<Ctrl-W>** to open the watch window and add the watch expression `k` to the top of the list of watch expressions. Now type **<Ctrl-U>**. Each time you type **<Ctrl-U>**, you will see the current value of `k`, which is incrementing about 5 times a second.

As an experiment, add another expression to the watch window:

```
k*5
```

Then type **<ctrl-U>** several times to observe the watch expressions `k` and `k*5`.

3.1.1.6 Summary of Features

So far you have practiced using the following features of Dynamic C.

- Loading, compiling and running a program. When you load a program it appears in an edit window. You can compile by selecting **Compile** on the task bar or from the **Compile** menu. When you compile the program, it is compiled into machine language and downloaded to the target over the serial port. The execution proceeds to the first statement of main where it pauses, waiting for you to command the program to run, which you can do with the **F9** key or by selecting **Run** on the **Run** menu. If want to compile and start the program running with one keystroke, use **F9**, the run command. If the program is not already compiled, the run command will compile it first.
- Single-stepping. This is done with the **F8** key. The **F7** key can also be used for single-stepping. If the **F7** key is used, then descent into subroutines will take place. With the **F8** key the subroutine is executed at full speed when the statement that calls it is stepped over.

- Setting break points. The **F2** key is used to turn on or turn off (toggle) a break point at the cursor position if the program has already been compiled. You can set a break point if the program is paused at a break point. You can also set a break point in a program that is running at full speed. This will cause the program to break if the execution thread hits your break point.
- Watch expressions. A watch expression is a C expression that is evaluated on command in the watch window. An expression is basically any type of C formula that can include operators, variables and function calls, but not statements that require multiple lines such as *for* or *switch*. You can have a list of watch expressions in the watch window. If you are single-stepping, then they are all evaluated on each step. You can also command the watch expression to be evaluated by using the **<Ctrl-U>** command. When a watch expression is evaluated at a break point, it is evaluated as if the statement was at the beginning of the function where you are single-stepping. If your program is running you can also evaluate watch expressions with a **<Ctrl-U>** if your program has a `runwatch()` command that is frequently executed. In this case, only expressions involving global variables can be evaluated, and the expression is evaluated as if it were in a separate function with no local variables.

3.1.1.7 Cooperative Multitasking

Cooperative multitasking is a convenient way to perform several different tasks at the same time. An example would be to step a machine through a sequence of steps and at the same time independently carry on a dialog with the operator via a human interface. Cooperative multitasking differs from another approach called preemptive multitasking. Dynamic C supports both types of multitasking. In cooperative multitasking each separate task voluntarily surrenders its compute time when it does not need to perform any more activity immediately. In preemptive multitasking control is forcibly removed from the task via an interrupt.

Dynamic C has language extensions to support multitasking. The major C constructs are called *costatements*, *cofunctions*, and *slicing*. These are described more completely in the ***Dynamic C User's Manual***. The example below, sample program `FLASHLEDS2.C`, uses costatements. A costatement is a way to perform a sequence of operations that involve pauses or waits for some external event to take place. A complete description of costatements is in the ***Dynamic C User's Manual***. The `FLASHLEDS2.C` sample program has two independent tasks. The first task flashes LED DS2 2.5 times a second. The second task flashes DS3 every 1.5 seconds.

```
#define DS2 0           // predefine for LED DS2
#define DS3 1           // predefine for LED DS3

//  This cofunction flashes LED on for ontime, then off for offtime
cofunc flashled[4](int led, int ontime, int offtime) {
    for(;;) {
        waitfor(DelayMs(ontime));                       // on delay
        WrPortI(PADR,&PADRShadow,(1<<led)|PADR);        // turn LED off
        waitfor(DelayMs(offtime);                       // off delay
        WrPortI(PADR,&PADRShadow,(1<<led)^0xff&PADR);   // turn LED on
    }
}

main {
    // Initialize ports
    WrPortI(SPCR,&SPCRShadow,0x84);     // Set Port A all outputs, LEDs on
    WrPortI(PEFR,&PEFRShadow,0x00);     // Set Port E normal I/O
    WrPortI(PEDDR,&PEDDRShadow,0x01);   // Set Port E bits 7…1 input, 0 output
    WrPortI(PECR,&PECRShadow,0x00);     // Set transfer clock as pclk/2

    for(;;) {                           // run forever
        costate {                       // start costatement
            wfd {                   // use wfd (waitfordone) with cofunctions
              flashled[0](DS2,200,200); // flash DS2 on 200 ms, off 200 ms
              flashled[1](DS3,1000,500);// flash DS3 on 1000 ms, off 500 ms
            }
        }                                // end costatement
    }                                    // end for loop
}                                         // end of main, never come here
```

The flashing of the LEDs is performed by the costatement. Costatements need to be executed regularly, often at least every 25 ms. To accomplish this, the costatements are enclosed in a **`while`** loop or a **`for`** loop. The term **`while`** loop is used as a handy way to describe a style of real-time programming in which most operations are done in one loop.

The costatement is executed on each pass through the big loop. When a **`waitfor`** or a **`wfd`** condition is encountered the first time, the current value of **`MS_TIMER`** is saved and then on each subsequent pass the saved value is compared to the current value. If a **`waitfor`** condition is not encountered, then a jump is made to the end of the costatement, and on the next pass of the loop, when the execution thread reaches the beginning of the costatement, execution passes directly to the **`waitfor`** statement. The costatement has the property that it can wait for long periods of time, but not use a lot of execution time. Each costatement is a little program with its own statement pointer that advances in response to conditions. On each pass through the big loop, as little as one statement in the costatement is executed, starting at the current position of the costatement's statement pointer. Consult the ***Dynamic C User's Manual*** for more details.

This program also illustrates a use for a shadow register. A shadow register is used to keep track of the contents of an I/O port that is write only—it can't be read back. If every time a write is made to the port the same bits are set in the shadow register, then the shadow register has the same data as the port register.

3.1.1.8 Advantages of Cooperative Multitasking

Cooperative multitasking, as implemented with language extensions, has the advantage of being intuitive. Unlike preemptive multitasking, variables can be shared between different tasks without having to take elaborate precautions. Sharing variables between tasks is the greatest cause of bugs in programs that use preemptive multitasking. It might seem that the biggest problem would be response time because of the big loop time becoming long as the program grows. Our solution for that is called slicing, which is further described in the ***Dynamic C User's Manual***.

3.1.2 Getting to Know the RCM2000

The following sample programs can be found in the **SAMPLES\RCM2000** folder.

- **EXTSRAM.C**—demonstrates the setup and simple addressing to an external SRAM. This program first maps the external SRAM to the I/O Bank 0 register with a maximum of 15 wait states, chip select strobe (which is ignored because of the circuitry), and allows writes. The first 256 bytes of SRAM are cleared and read back. Values are then written to the same area and are read back. The Dynamic C **STDIO** window will indicate if writes and reads did not occur

  Connect an external SRAM as shown below before you run this sample program.

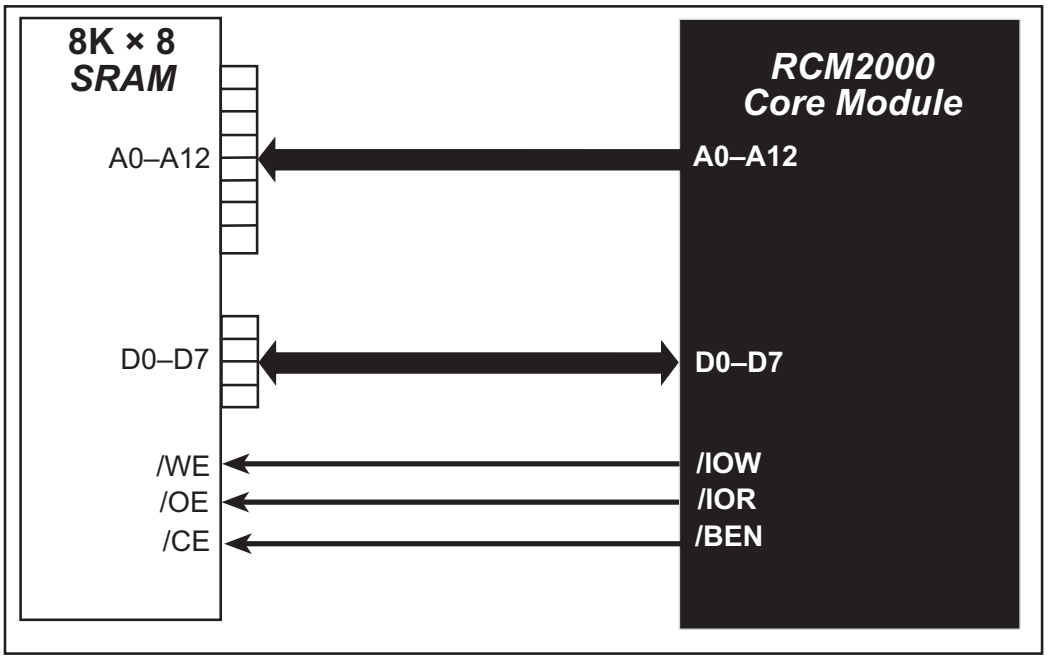

- **FLASHLED.C**—repeatedly flashes LED DS3 on the Prototyping Board on and off. LED DS3 is controlled by Parallel Port A bit 1 (PA1).
- **FLASHLED2.C**—repeatedly flashes LED DS3 on the Prototyping Board on and off. LED DS3 is controlled by Parallel Port A bit 1 (PA1).

  This sample program also shows the use of the **runwatch()** function to allow Dynamic C to update watch expressions while running. The following steps explain how to do this.

  1. Add a watch expression for "k" in the **Inspect > Add Watch** dialog box.
  2. Click "Add" or "Add to top" so that it will be in the watch list permanently.
  3. Click **OK** to close the dialog box.
  4. Press **<Ctrl+U>** while the program is running. This will update the watch window

- **`FLASHLEDS.C`**—demonstrates the use of coding with assembly instructions, cofunctions, and costatements to flash LEDs DS2 and DS3 on the Prototyping Board on and off. LEDs DS2 and DS3 are controlled by Parallel Port A bit 0 (PA0) and Parallel Port A bit 1 (PA1).Once you have compile this program and it is running, LEDs DS2 and DS3 will flash on/off at different rates.
- **`FLASHLEDS2.C`**—demonstrates the use of cofunctions and costatements to flash LEDs DS2 and DS3 on the Prototyping Board on and off. LEDs DS2 and DS3 are controlled by Parallel Port A bit 0 (PA0) and Parallel Port A bit 1 (PA1).Once you have compile this program and it is running, LEDs DS2 and DS3 will flash on/off at different rates.
- **`KEYLCD.C`**—demonstrates a simple setup for a 2 × 6 keypad and a 2 × 20 LCD.

  Connect the keypad to Parallel Ports B, C, and D.

  PB0—Keypad Col 0
  PC1—Keypad Col 1
  PB2—Keypad Col 2
  PB3—Keypad Col 3
  PB4—Keypad Col 4
  PB5—Keypad Col 5
  PD6—Keypad Row 0
  PD7—Keypad Row 1

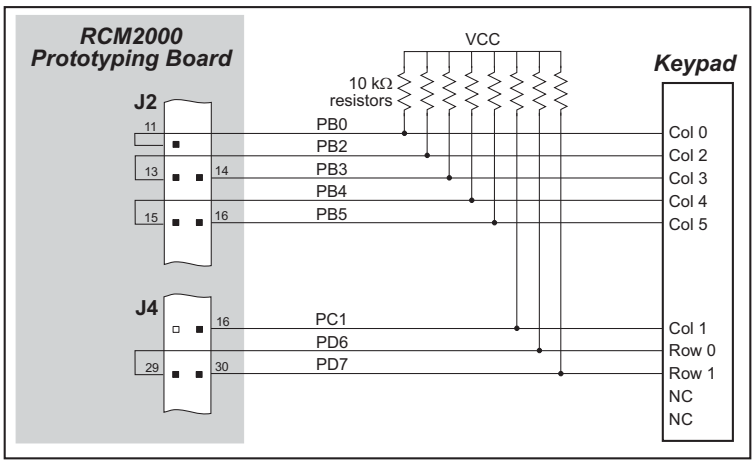

  Connect the LCD to Parallel Port A.

  PA0—backlight (if connected)
  PA1—LCD /CS
  PA2—LCD RS (High = Control, Low = Data) / LCD Contrast 0
  PA3—LCD /WR/ LCD Contrast 1
  PA4—LCD D4 / LCD Contrast 2
  PA5—LCD D5 / LCD Contrast 3
  PA6—LCD D6 / LCD Contrast 4
  PA7—LCD D7 / LCD Contrast 5

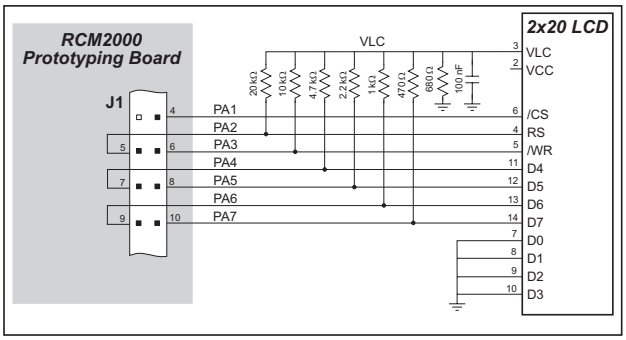

  Once the connections have been made and the sample program is running, the LCD will display two rows of 6 dots, each dot representing the corresponding key. When a key is pressed, the corresponding dot will become an asterisk.

- **`LCD_DEMO.C`**—demonstrates a simple setup for an LCD that uses the HD44780 controller or an equivalent.

  Connect the LCD to the RCM2000 address and data lines on the Prototyping Board.

  D0—DB0
  D1—DB1
  D2—DB2
  D3—DB3
  D4—DB4
  D5—DB5
  D6—DB6
  D7—DB7

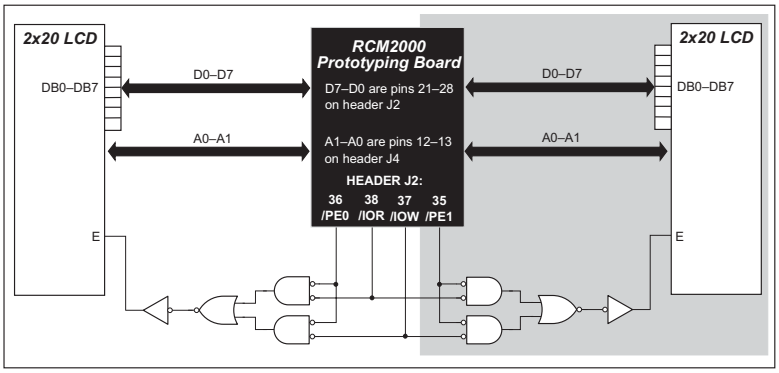

  A0—RS (Register Select: 0 = command, 1 = data)
  A1—R/W (0=write, 1=read)
  *—E (normally low: latches on high-to-low transition)

- **`SWTEST.C`**—demonstrates the use of pushbutton switches S2 and S3 to toggle LEDs DS2 and DS3 on the Prototyping Board on and off.

  Parallel Port A bit 0 = LED DS2
  Parallel Port A bit 1 = LED DS3

  Parallel Port B bit 2 = switch S2
  Parallel Port B bit 3 = switch S3

- **`TOGGLELED.C`**—demonstrates the use of costatements to detect switch presses using the press-and-release method of debouncing. As soon as the sample program starts running, LED DS3 on the Prototyping Board (which is controlled by PA1) starts flashing once per second. Press switch S2 on the Prototyping Board (which is connected to PB2) to toggle LED DS2 on the Prototyping Board (which is controlled by PA0). The pushbutton switch is debounced by the software.

3.1.3 Serial Communication

The following sample programs can be found in the **SAMPLES\RCM2000** folder.

Two sample programs, **CORE_FLOW-CONTROL.C** and **CORE_PARITY.C**, are available to illustrate RS-232 communication. To run these sample programs, you will have to add an RS-232 transceiver such as the MAX232 at location U2 and four 100 nF charge-storage capacitors at C3–C6 on the Prototyping Board. Also install the 2 × 5 IDC header included with the Prototyping Board accessory parts at J6 to interface the RS-232 signals.

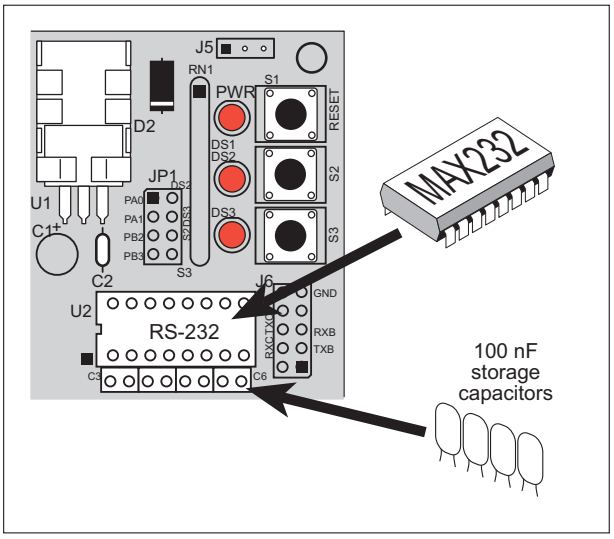

The diagram shows the connections.

- **CORE_FLOWCONTROL.C**—This program demonstrates hardware flow control by configuring Serial Port C (PC3/PC2) for CTS/RTS with serial data coming from TxB at 115,200 bps. One character at a time is received and is displayed in the **STDIO** window.

  To set up the Prototyping Board, you will need to tie PC4 and PC5 (TxB and RxB) together at header J4, and you will also tie PC2 and PC3 (TxC and RxC) together as shown in the diagram.

  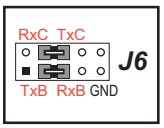

  A repeating triangular pattern should print out in the **STDIO** window. The program will periodically switch flow control on or off to demonstrate the effect of no flow control.

  Refer to the **serBflowcontrolOn()** function call in the ***Dynamic C Function Reference Manual*** for a general description on how to set up flow control lines.

- **CORE_PARITY.C**—This program demonstrates the use of parity modes by repeatedly sending byte values 0–127 from Serial Port B to Serial Port C. The program will switch between generating parity or not on Serial Port B. Serial Port C will always be checking parity, so parity errors should occur during every other sequence.

  To set up the Prototyping Board, you will need to tie PC4 and PC3 (TxB and RxC) together at header J4 as shown in the diagram.

  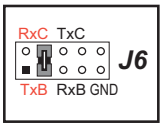

  The Dynamic C **STDIO** window will display the error sequence.

4. HARDWARE REFERENCE

Chapter 4 describes the principal subsystems for the RCM2000.

4.1 RCM2000 Digital Inputs and Outputs

Figure 4 shows the subsystems designed into the RCM2000.

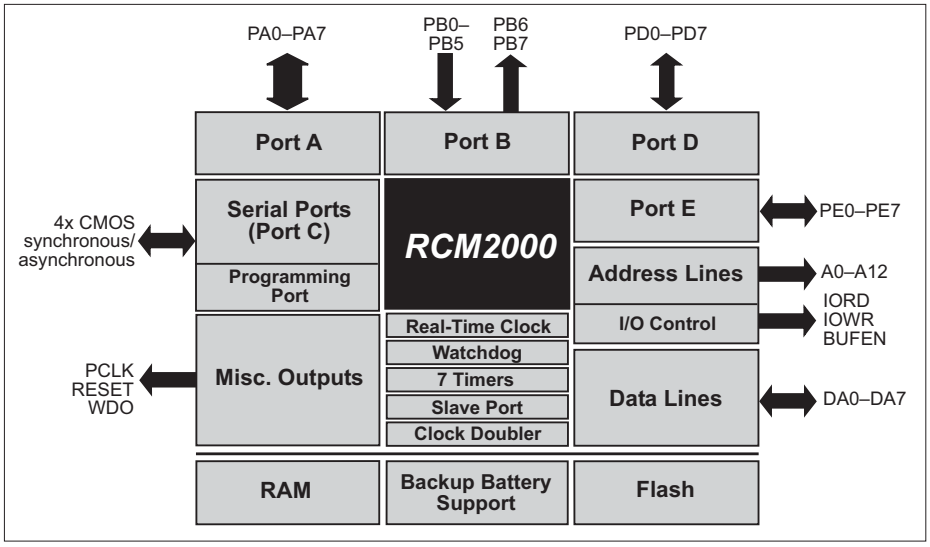

Figure 4. Rabbit Subsystems

The RCM2000 has 40 parallel I/O lines grouped in five 8-bit ports available on headers J1 and J2. The 24 bidirectional I/O lines are located on pins PA0–PA7, PD0-PD7, and PE0-PE7. The pinouts for headers J1 and J2 are shown in Figure 5.

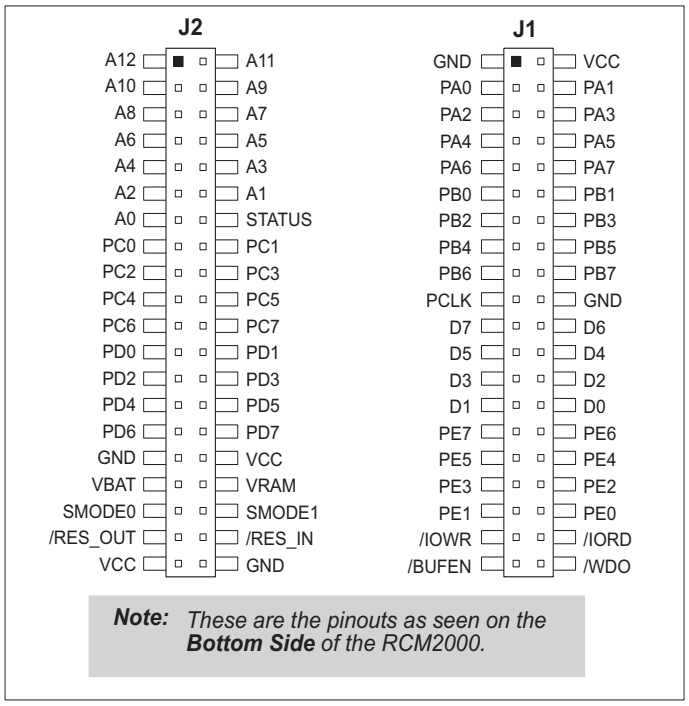

Figure 5. RCM2000 Pinout

The ports on the Rabbit 2000 microprocessor used in the RCM2000 are configurable, and so the factory defaults can be reconfigured. Table 2 lists the Rabbit 2000 factory defaults and the alternate configurations.

Table 2. RCM2000 Pinout Configurations

Pin		Pin Name	Default Use	Alternate Use	Notes
Header J1	1, 20	GND			
	2	VCC			
	3–10	PA[0:7]	Parallel I/O	Slave port data bus SD0–SD7	
	11	PB0	Input	Serial port clock CLKB	
	12	PB1	Input	Serial port clock CLKA	CLKA is connected to programming port (header J3, pin 3)
	13	PB2	Input	Slave port write /SWR	
	14	PB3	Input	Slave port read /SRD	
	15	PB4	Input	SA0	Slave port address lines
	16	PB5	Input	SA1	
	17	PB6	Output		
	18	PB7	Output	Slave port attention line /SLAVEATTN	
	19	PCLK	Output (Internal Clock)	Output	Turned off in software
	21–28	D[7:0]	Input/Output		Rabbit 2000 data bus
	29	PE7	Bitwise or parallel programmable I/O	I7 output or slave port chip select /SCS	
	30	PE6		I6 output	
	31	PE5		I5 output or INT1B input	
	32	PE4		I4 output or INT0B input	
	33	PE3		I3 output	
	34	PE2		I2 output	
	35	PE1		I1 output or INT1A input	
	36	PE0		I0 output or INT0A input	
	37	/IOWR	Output (I/O write strobe)		
	38	/IORD	Output (I/O read strobe)		
	39	/BUFEN	Output (I/O buffer enable)		
	40	/WDO	Output (Watchdog output)	May also be used to output a 30 µs pulse	Outputs a pulse when the internal watchdog times out

Table 2. RCM2000 Pinout Configurations (continued)

Pin		Pin Name	Default Use	Alternate Use	Notes
Header J2	1–13	A[12:0]	Output		Rabbit 2000 address bus
	14	STAT	Output (Status)	Output	
	15	PC0	Output	TXD	
	16	PC1	Input	RXD	
	17	PC2	Output	TXC	
	18	PC3	Input	RXC	
	19	PC4	Output	TXB	
	20	PC5	Input	RXB	
	21	PC6	Output	TXA	
	22	PC7	Input	RXA	
	21	PC6	Output	TXA	Connected to programming port
	22	PC7	Input	RXA	
	23–26	PD[0:3]	Bitwise or parallel programmable I/O, can be driven or open-drain output		16 mA sourcing and sinking current at full AC switching speed
	27	PD4		ATXB output	
	28	PD5		ARXB input	
	29	PD6		ATXA output	
	30	PD7		ARXA input	
	31, 40	GND			
	32, 39	VCC			
	33	VBATR	3 V battery input		
	34	VRAM	2.1 V output		100 kΩ minimum load
	35–36	SMODE0, SMODE1	(0,0)—start executing at address zero		No programming cable attached
			SMODE0 =1, SMODE1 = 1 Cold boot from asynchronous serial port A at 2400 bps (programming cable connected)	(0,1)—cold boot from slave port (1,0)—cold boot from clocked serial port A	With programming cable attached
	37	/RES_OUT	Reset Output		
	38	/RES_IN	Reset Input		

As shown in Table 2, pins PA0–PA7 can be used to allow the Rabbit 2000 to be a slave to another processor. PE0, PE1, PE4, and PE5 can be used as external interrupts INT0A, INT1A, INT0B, and INT1B. Pins PB0 and PB1 can be used to access the clock on Serial Port B and Serial Port A of the Rabbit microprocessor. Pins PD4 and PD6 can be programmed to be optional serial outputs for Serial Ports B and A. PD5 and PD7 can be used as alternate serial inputs by Serial Ports B and A.

4.1.1 Dedicated Inputs

PB0 and PB1 are designated as inputs because the Rabbit 2000 is operating in an asynchronous mode. Four of the input-only pins are located on PB2–PB5. When Port C is used as a parallel port, PC1, PC3, PC5, and PC7 are also inputs only. All the inputs are pulled up with 47 kΩ resistors. Figure 6 shows the locations of these pullup resistors.

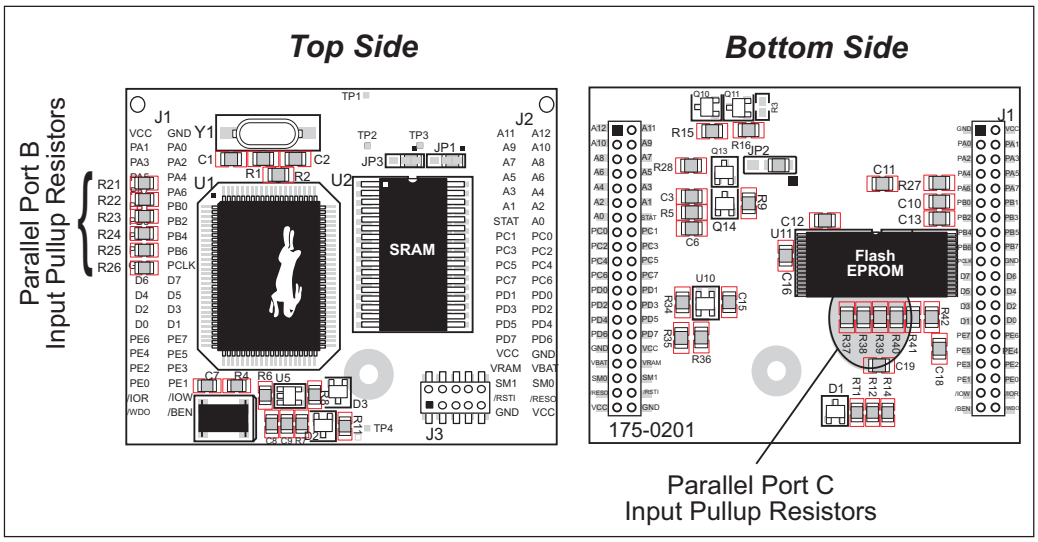

Figure 6. Locations of Digital Input Pullup Resistors

NOTE: All the digital input pullup resistors are located on the bottom side of RCM2000 boards marked 175-0168

PB2–PB5 can instead be used for the slave port. PB2 and PB3 are slave write and slave read strobes, while PB4 and PB5 serve as slave address lines SA0 and SA1, and are used to access the slave registers (SD0–SD7), which is the alternate assignment for Parallel Port A. Parallel Port C pins PC1, PC3, PC5, and PC7 are inputs only can alternately be selectively enabled to serve as the serial data inputs for Serial Ports D, C, B, and A.

4.1.2 Dedicated Outputs

Two of the output-only pins are located on PB6–PB7. PB7 can also be used with the slave port as the /SLAVEATTN output. This configuration signifies that the slave is requesting attention from the master. When Port C is used as a parallel port, PC0, PC2, PC4 and PC6 are outputs only. These pins can alternately serve as the serial data outputs for Serial Ports D, C, B, and A.

4.2 Memory I/O Interface

Thirteen of the Rabbit 2000 address lines (A0–A12) and all the data lines (D0–D7) are available as outputs on the RCM2000. I/0 write (/IOWR), I/0 read (/IORD), buffer enable (/BUFEN), and Watchdog Output (/WDO) are also available for interfacing to external devices.

The STATUS output has three different programmable functions:

1. It can be driven low on the first op code fetch cycle.
2. It can be driven low during an interrupt acknowledge cycle.
3. It can also serve as a general-purpose output.

4.2.1 Additional I/0

Although, the output clock is available on the PCLK pin, the output clock is disabled in software starting with Dynamic C v 7.02 and later. This reduces radiated emissions. The primary function of PCLK is as a peripheral clock or a peripheral clock ÷ 2, but PCLK can instead be used as a digital output. See Section 5.2.1, “PCLK Output,” for more information.

Two status mode pins, SMODE0 and SMODE1, are available as inputs. The logic state of these two pins determines the startup procedure after a reset. /RES_IN is an external input used to reset the Rabbit 2000 microprocessor and RCM2000 memory. /RES_OUT is an output from the reset circuitry that can be used to reset other peripheral devices.

4.3 Serial Communication

The RCM2000 does not have an RS-232 or an RS-485 transceiver directly on the board. However, the Prototyping Board does support a industry standard RS-232 transceiver chip. See Appendix B, “Prototyping Board,” for more information.

4.3.1 Serial Ports

There are four serial ports designated as Serial Ports A, B, C, and D. All four serial ports can operate in an asynchronous mode up to the baud rate of the system clock divided by 32. An asynchronous port can handle 7 or 8 data bits. A 9th bit address scheme, where an additional bit is sent to mark the first byte of a message, is also supported. Serial Ports A and B can be operated alternately in the clocked serial mode. In this mode, a clock line synchronously clocks the data in or out. Either of the two communicating devices can supply the clock. When the Rabbit provides the clock, the baud rate can be up to 1/4 of the system clock frequency, or more than 6.45 Mbps for a 25.8 MHz clock speed.

4.3.2 Programming Port

The RCM2000 has a 10-pin program header labeled J3. The programming port uses the Rabbit 2000's Serial Port A for communication. Dynamic C uses the programming port to download and debug programs.

The programming port is also used for the following operations.

- Cold-boot the Rabbit 2000 after a reset.
- Remotely download and debug a program over an Ethernet connection using the RabbitLink EG2110.
- Fast copy designated portions of flash memory from one Rabbit-based board (the master) to another (the slave) using the Rabbit Cloning Board.

Alternate Uses of the Serial Programming Port

All three clocked Serial Port A signals are available as

- a synchronous serial port
- an asynchronous serial port, with the clock line usable as a general CMOS input

The serial programming port may also be used as a serial port via the **DIAG** connector on the serial programming cable.

In addition to Serial Port A, the Rabbit 2000 startup-mode (SMODE0, SMODE1), status, and reset pins are available on the serial programming port.

The two startup mode pins determine what happens after a reset—the Rabbit 2000 is either cold-booted or the program begins executing at address 0x0000. These two SMODE pins can be used as general inputs once the cold boot is complete.

The status pin is used by Dynamic C to determine whether a Rabbit microprocessor is present. The status output has three different programmable functions:

1. It can be driven low on the first op code fetch cycle.
2. It can be driven low during an interrupt acknowledge cycle.
3. It can also serve as a general-purpose output.

The /RESET_IN pin is an external input that is used to reset the Rabbit 2000 and the onboard peripheral circuits on the RabbitCore module. The serial programming port can be used to force a hard reset on the RabbitCore module by asserting the /RESET_IN signal.

Refer to the ***Rabbit 2000 Microprocessor User's Manual*** for more information.

4.4 Serial Programming Cable

The programming cable is used to connect the RCM2000's programming port to a PC serial COM port. The programming cable converts the RS-232 voltage levels used by the PC serial port to the TTL voltage levels used by the Rabbit 2000.

When the **PROG** connector on the programming cable is connected to the RCM2000's programming header, programs can be downloaded and debugged over the serial interface.

The **DIAG** connector of the programming cable may be used on the RCM2000's programming header with the RCM2000 operating in the Run Mode. This allows the programming port to be used as a regular serial port.

4.4.1 Changing Between Program Mode and Run Mode

The RCM2000 is automatically in Program Mode when the **PROG** connector on the programming cable is attached to the RCM2000, and is automatically in Run Mode when no programming cable is attached. When the Rabbit 2000 is reset, the operating mode is determined by the status of the SMODE pins. When the programming cable's **PROG** connector is attached, the SMODE pins are pulled high, placing the Rabbit 2000 in the Program Mode. When the programming cable's **PROG** connector is not attached, the SMODE pins are pulled low, causing the Rabbit 2000 to operate in the Run Mode.

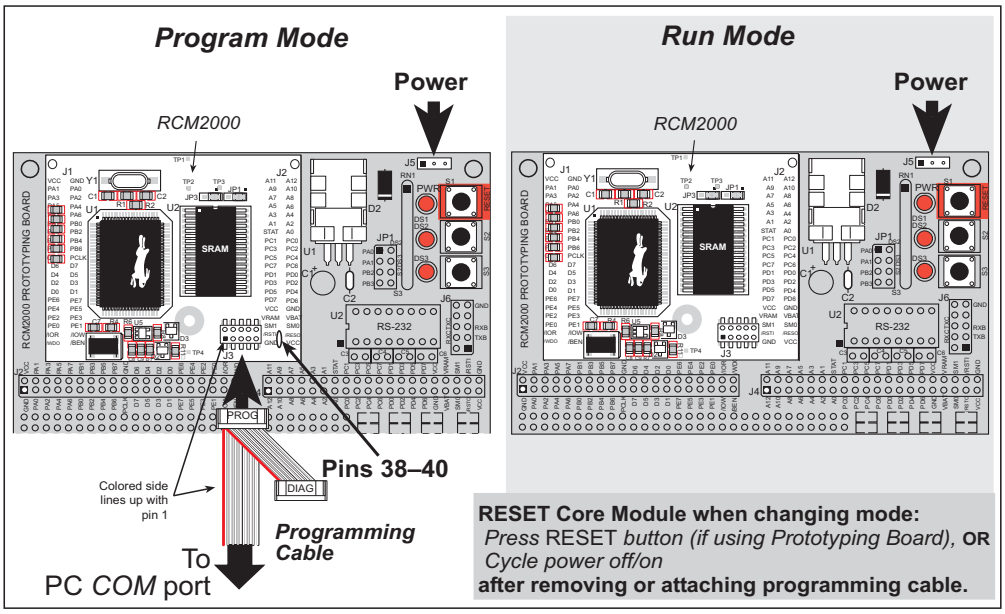

Figure 7. RCM2000 Program Mode and Run Mode Setup

A program "runs" in either mode, but can only be downloaded and debugged when the RCM2000 is in the program mode.

Refer to the ***Rabbit 2000 Microprocessor User's Manual*** for more information on the programming port and the programming cable.

4.4.2 Standalone Operation of the RCM2000

The RCM2000 must be programmed via the RCM2000 Prototyping Board or via a similar arrangement on a customer-supplied board. Once the RCM2000 has been programmed successfully, remove the programming cable from the programming connector and reset the RCM2000. The RCM2000 may be reset by cycling the power off/on or by pressing the **RESET** button on the Prototyping Board. The RCM2000 module may now be removed from the Prototyping Board for end-use installation.

> **CAUTION:** Power to the Prototyping Board or other boards should be disconnected when removing or installing your RCM2000 module to protect against inadvertent shorts across the pins or damage to the RCM2000 if the pins are not plugged in correctly. Do not reapply power until you have verified that the RCM2000 module is plugged in correctly.

4.5 Other Hardware

4.5.1 Clock Doubler

The RCM2000 takes advantage of the Rabbit 2000 microprocessor's internal clock doubler. A built-in clock doubler allows half-frequency crystals to be used to reduce radiated emissions. The 25.8 MHz (RCM 2000 and RCM2010) and 18.4 MHz (RCM 2020) frequencies are generated using 12.9 MHz and 9.2 MHz crystals. The clock doubler is disabled automatically in the BIOS for crystals with a frequency above 12.9 MHz.

The clock doubler can be disabled if 25.8 MHz or 18.4 MHz clock speeds are not required. Disabling the Rabbit 2000 microprocessor's internal clock will reduce power consumption and further reduce radiated emissions. The clock doubler is disabled with a simple configuration macro as shown below.

1. Select the "Defines" tab from the Dynamic C **Options > Project Options** menu.
2. Add the line `CLOCK_DOUBLED=0` to always disable the clock doubler.

   The clock doubler is enabled by default, and usually no entry is needed. If you need to specify that the clock doubler is always enabled, add the line `CLOCK_DOUBLED=1` to always enable the clock doubler. The clock speed will be doubled as long as the crystal frequency is less than or equal to 26.7264 MHz.
3. Click **OK** to save the macro. The clock doubler will now remain off whenever you are in the project file where you defined the macro.

Change the serial baud rate to 57,600 bps when the RCM2000 is operated at 12.9 MHz or 9.2 MHz.

4.5.2 Spectrum Spreader

RCM2000 RabbitCore modules that have a Rabbit 2000 microprocessor labeled ***IQ4T*** (or higher) are equipped with a Rabbit 2000 microprocessor that has a spectrum spreader, which helps to mitigate EMI problems. By default, the spectrum spreader is on automatically for RCM2000 modules that carry the ***IQ4T*** (or higher) marking when used with Dynamic C 7.30 or later versions, but the spectrum spreader may also be turned off or set to a stronger setting. The means for doing so is through a simple configuration macro as shown below.

1. Select the "Defines" tab from the Dynamic C **Options > Project Options** menu.
2. Normal spreading is the default, and usually no entry is needed. If you need to specify normal spreading, add the line

   ```
   ENABLE_SPREADER=1
   ```

   For strong spreading, add the line

   ```
   ENABLE_SPREADER=2
   ```

   To disable the spectrum spreader, add the line

   ```
   ENABLE_SPREADER=0
   ```

   NOTE: The strong spectrum-spreading setting is usually not necessary for the RCM2000.

3. Click **OK** to save the macro. The spectrum spreader will now remain off whenever you are in the project file where you defined the macro.

There is no spectrum spreader functionality for RCM2000 RabbitCore modules that have a Rabbit 2000 microprocessor labeled ***IQ1T***, ***IQ2T***, or ***IQ3T***, or when using any RCM2000 with a version of Dynamic C prior to 7.30.

4.6 Memory

4.6.1 SRAM

The RCM2000 is designed to accept 32K to 512K of SRAM packaged in an SOIC case.

4.6.2 Flash EPROM

The RCM2000 is also designed to accept 128K to 512K of flash EPROM packaged in a TSOP case.

> **NOTE:** Rabbit recommends that any customer applications should not be constrained by the sector size of the flash EPROM since it may be necessary to change the sector size in the future.

Writing to arbitrary flash memory addresses at run time is also discouraged. Instead, define a "user block" area to store persistent data. The functions **`writeUserBlock`** and **`readUserBlock`** are provided for this.

A Flash Memory Bank Select jumper configuration option based on 0 Ω surface-mounted resistors exists at header JP3. This option, used in conjunction with some configuration macros, allows Dynamic C to compile two different co-resident programs for the upper and lower halves of the 512K flash in such a way that both programs start at logical address 0000. This is useful for applications that require a resident download manager and a separate downloaded program. See Technical Note 218, ***Implementing a Serial Download Manager for a 256K Flash***, for details.

4.6.3 Dynamic C BIOS Source Files

The Dynamic C BIOS source files handle different standard RAM and flash EPROM sizes automatically.

5. SOFTWARE REFERENCE

Dynamic C is an integrated development system for writing embedded software. It runs on an IBM-compatible PC and is designed for use with Rabbit single-board computers and other single-board computers based on the Rabbit microprocessor. Chapter 4 provides the libraries and function calls related to the RCM2000.

5.1 More About Dynamic C

Dynamic C has been in use worldwide since 1989. Dynamic C is specially designed for programming embedded systems. Dynamic C features quick compile and interactive debugging in the real environment. A complete reference to Dynamic C is contained in the ***Dynamic C User's Manual***.

Dynamic C for Rabbit® processors uses the standard Rabbit programming interface. This is a 10-pin connector that connects to the Rabbit Serial Port A. It is possible to reset and cold-boot a Rabbit processor via the programming port. No software needs to be present in the target system. More details are available in the ***Rabbit 2000 Microprocessor User's Manual***.

Dynamic C cold-boots the target system and compiles the BIOS. The BIOS is a basic program of a few thousand bytes in length that provides the debugging and communication facilities that Dynamic C needs. Once the BIOS has been compiled, the user can compile his own program and test it. If the BIOS fails because the program stops running, a new cold boot and BIOS compile can be done at any time.

The BIOS can be customized by using **`#define`** options.

Dynamic C does not use **`include`** files, rather it has libraries that are used for the same purpose, that is, to supply function prototypes to programs before they are compiled. See Section 4.24, "Modules," in the ***Dynamic C User's Manual*** for more information.

Dynamic C supports assembly language, either as separate functions or as fragments embedded in C programs. Interrupt routines may be written in Dynamic C or in assembly language.

5.1.1 Using Dynamic C

You have a choice of doing your software development in the flash memory or in the SRAM included on the RCM2000. The flash memory and SRAM options are selected with the **Options > Project Options > Compiler** menu.

The advantage of working in RAM is to save wear on the flash memory, which is limited to about 100,000 write cycles. The disadvantage is that the code and data might not both fit in RAM.

> **NOTE:** An application can be developed in RAM, but cannot run standalone from RAM after the programming cable is disconnected. All standalone applications can only run from flash memory.

> **NOTE:** Do not depend on the flash memory sector size or type. Due to the volatility of the flash memory market, the RCM2000 and Dynamic C were designed to accommodate flash devices with various sector sizes.

Developing software with Dynamic C is simple. Users can write, compile, and test C and assembly code without leaving the Dynamic C development environment. Debugging occurs while the application runs on the target. Alternatively, users can compile a program to an image file for later loading. Dynamic C runs on PCs under Windows 95, 98, 2000, NT, Me, and XP. Programs can be downloaded at baud rates of up to 460,800 bps after the program compiles.

Dynamic C has a number of standard features.

- Full-feature source and/or assembly-level debugger, no in-circuit emulator required.
- Royalty-free TCP/IP stack with source code and most common protocols.
- Hundreds of functions in source-code libraries and sample programs:
  - ▶ Exceptionally fast support for floating-point arithmetic and transcendental functions.
  - ▶ RS-232 and RS-485 serial communication.
  - ▶ Analog and digital I/O drivers.
  - ▶ I^2C, SPI, GPS, file system.
  - ▶ LCD display and keypad drivers.
- Powerful language extensions for cooperative or preemptive multitasking.
- Loader utility program to load binary images into Rabbit targets in the absence of Dynamic C.
- Provision for customers to create their own source code libraries and augment on-line help by creating “function description” block comments using a special format for library functions.

- Standard debugging features:
  - Breakpoints—Set breakpoints that can disable interrupts.
  - Single-stepping—Step into or over functions at a source or machine code level, µC/OS-II aware.
  - Code disassembly—The disassembly window displays addresses, opcodes, mnemonics, and machine cycle times. Switch between debugging at machine-code level and source-code level by simply opening or closing the disassembly window.
  - Watch expressions—Watch expressions are compiled when defined, so complex expressions including function calls may be placed into watch expressions. Watch expressions can be updated with or without stopping program execution.
  - Register window—All processor registers and flags are displayed. The contents of general registers may be modified in the window by the user.
  - Stack window—shows the contents of the top of the stack.
  - Hex memory dump—displays the contents of memory at any address.
  - **STDIO** window—`printf` outputs to this window and keyboard input on the host PC can be detected for debugging purposes. `printf` output may also be sent to a serial port or file.

5.2 I/O

The RCM2000 was designed to interface with other systems, and so there are no drivers written specifically for this purpose. The general Dynamic C read and write functions allow you to customize the parallel I/O to meet your specific needs. For example, use

```
WrPortI(PEDDR, &PEDDRShadow, 0x00);
```

to set all the port E bits as inputs, or use

```
WrPortI(PEDDR, &PEDDRShadow, 0xFF);
```

to set all the port E bits as outputs.

The sample programs in the Dynamic C **SAMPLES** directory provide further examples.

5.2.1 PCLK Output

The PCLK output is controlled by bits 7 and 6 of the Global Output Register (GOCR) on the Rabbit 2000 microprocessor, and so can be enabled or disabled in software. Starting with Dynamic C v 7.02, the PCLK output is disabled by default at compile time to minimize radiated emissions; the PCLK output is enabled in earlier versions of Dynamic C.

Use the following code to set the PCLK output as needed.

PCLK output driven with peripheral clock:

```
WrPortI(GOCR, &GOCRShadow, (GOCRShadow&~0xc0));
```

PCLK output driven with peripheral clock ÷ 2:

```
WrPortI(GOCR, &GOCRShadow, ((GOCRShadow&~0xc0)| 0x40));
```

PCLK output off (low):

```
WrPortI(GOCR, &GOCRShadow, ((GOCRShadow&~0xc0)| 0x80));
```

PCLK output on (high):

```
WrPortI(GOCR, &GOCRShadow, (GOCRShadow | 0xc0));
```

5.3 Serial Communication Drivers

Library files included with Dynamic C provide a full range of serial communications support. The `RS232.LIB` library provides a set of circular-buffer-based serial functions. The `PACKET.LIB` library provides packet-based serial functions where packets can be delimited by the 9th bit, by transmission gaps, or with user-defined special characters. Both libraries provide blocking functions, which do not return until they are finished transmitting or receiving, and nonblocking functions, which must be called repeatedly until they are finished. For more information, see the ***Dynamic C User's Manual*** and Technical Note 213, ***Rabbit 2000 Serial Port Software***.

5.4 Upgrading Dynamic C

Dynamic C patches that focus on bug fixes are available from time to time. Check the Web site www.rabbit.com/support/ for the latest patches, workarounds, and bug fixes.

The default installation of a patch or bug fix is to install the file in a directory (folder) different from that of the original Dynamic C installation. Rabbit recommends using a different directory so that you can verify the operation of the patch without overwriting the existing Dynamic C installation. If you have made any changes to the BIOS or to libraries, or if you have programs in the old directory (folder), make these same changes to the BIOS or libraries in the new directory containing the patch. Do ***not*** simply copy over an entire file since you may overwrite a bug fix; of course, you may copy over any programs you have written. Once you are sure the new patch works entirely to your satisfaction, you may retire the existing installation, but keep it available to handle legacy applications.

5.4.1 Extras

Dynamic C installations are designed for use with the board they are included with, and are included at no charge as part of our low-cost kits.

Starting with Dynamic C version 9.60, Dynamic C includes the popular µC/OS-II real-time operating system, point-to-point protocol (PPP), FAT file system, RabbitWeb, and other select libraries. Rabbit also offers for purchase the Rabbit Embedded Security Pack featuring the Secure Sockets Layer (SSL) and a specific Advanced Encryption Standard (AES) library.

In addition to the Web-based technical support included at no extra charge, a one-year telephone-based technical support subscription is also available for purchase.

Visit our Web site at www.rabbit.com for further information and complete documentation.

APPENDIX A. SPECIFICATIONS

Appendix A provides the specifications for the RCM2000, and describes the conformal coating.

A.1 Electrical and Mechanical Specifications

Figure A-1 shows the mechanical dimensions for the RCM2000.

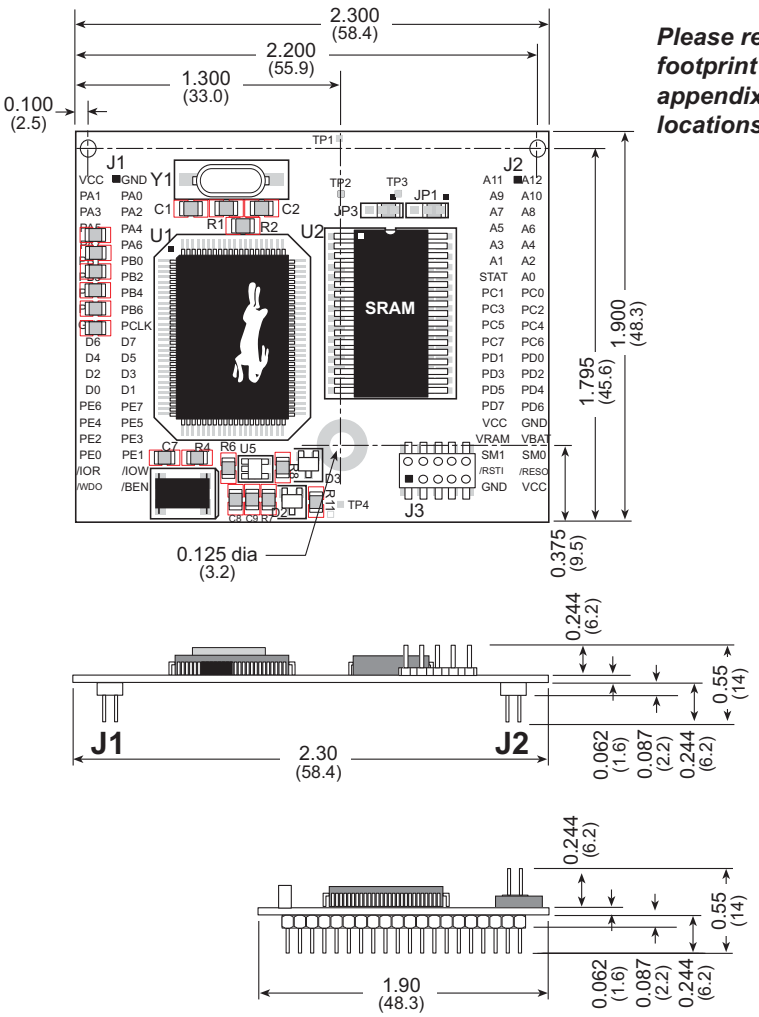

Please refer to the RCM2000 footprint diagram later in this appendix for precise header locations.

Figure A-1. RCM2000 Dimensions

NOTE: All measurements are in inches followed by millimeters enclosed in parentheses. All dimensions have a manufacturing tolerance of ±0.01" (0.25 mm).

It is recommended that you allow for an “exclusion zone” of 0.04" (1 mm) around the RCM2000 in all directions when the RCM2000 is incorporated into an assembly that includes other printed circuit boards. An “exclusion zone” of 0.08" (2 mm) is recommended below the RCM2000 when the RCM2000 is plugged into another assembly using the shortest connectors for header J1. Figure A-2 shows this “exclusion zone.”

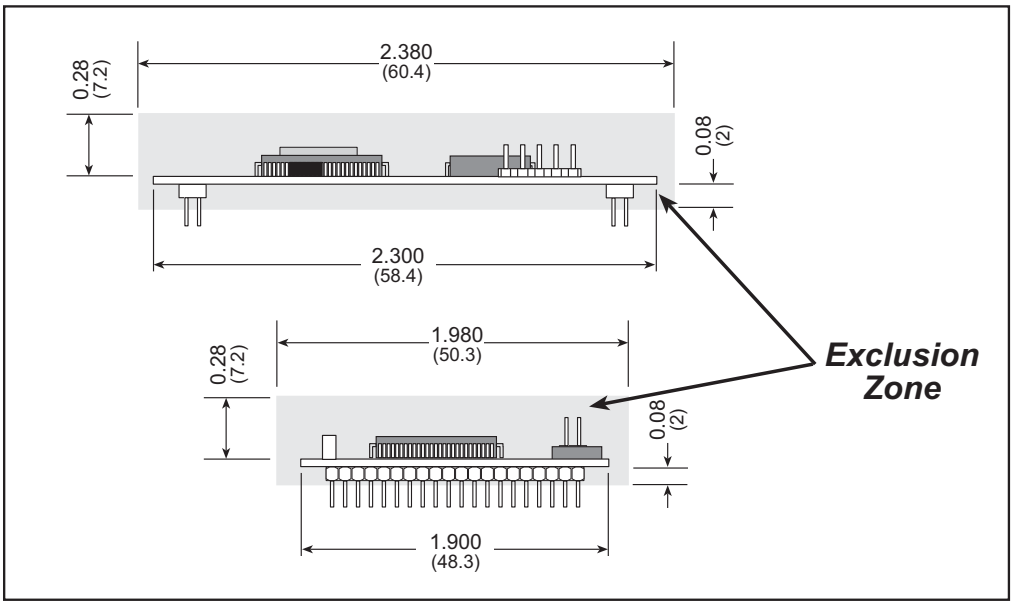

Figure A-2. RCM2000 “Exclusion Zone”

Table A-1 lists the electrical, mechanical, and environmental specifications for the RCM2000.

Table A-1. RCM2000 Specifications

Parameter	RCM2000	RCM2010	RCM2020
Microprocessor	Rabbit 2000® at 25.8 MHz		Rabbit 2000® at 18.432 MHz
Flash EPROM	256K (supports 128K–512K)		
SRAM	512K	128K	
Backup Battery	Connection for user-supplied backup battery (to support RTC and SRAM)		
General-Purpose I/O	40 parallel I/0 lines grouped in five 8-bit ports (and shared with serial ports): • 26 configurable I/O • 8 fixed inputs • 6 fixed outputs		
Additional Inputs	2 startup mode (for master/slave), reset in		
Additional Outputs	Status, clock, watchdog, reset out		
Memory, I/O Interface	13 address lines, 8 data lines, I/O read/write, buffer enable		
Serial Ports	Four 5 V CMOS-compatible ports. Two ports are configurable as clocked ports, one is a dedicated RS-232 programming port.		
Serial Rate	Maximum burst rate = CLK/32 Maximum sustained rate = CLK/64		
Slave Interface	A slave port allows the RCM2000 to be used as an intelligent peripheral device slaved to a master processor, which may either be another Rabbit 2000 or any other type of processor		
Real-Time Clock	Yes		
Timers	Five 8-bit timers cascadable in pairs, one 10-bit timer with 2 match registers that each have an interrupt		
Watchdog/Supervisor	Yes		
Power	4.75 V to 5.25 V DC, 130 mA		4.75 V to 5.25 V DC, 98 mA
Standby Current	10 µA (typical)		
Operating Temperature	–40°C to +85°C		
Humidity	5% to 95%, noncondensing		
Connectors	Two IDC headers 2 × 20, 2 mm pitch		
Board Size	1.90" × 2.30" × 0.55" (48.3 mm × 58.4 mm × 14 mm)		

A.1.1 Headers

The RCM2000 uses headers at J1, J2, and J3 for physical connection to other boards. J1 and J2 are 2 × 20 SMT headers with a 2 mm pin spacing. J3 is a 2 × 5 header with a 2 mm pin spacing.

Figure A-3 shows the layout of another board for the RCM2000 to be plugged in to. These reference design values are relative to the mounting hole or to the header connectors.

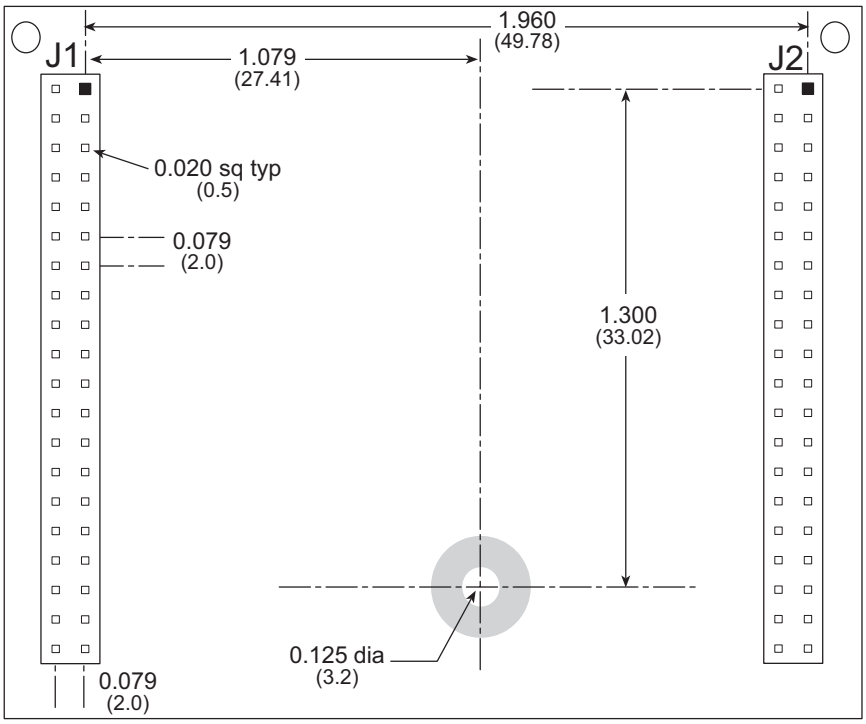

Figure A-3. User Board Footprint for RCM2000 (Top View)

NOTE: Two holes were added near the top of the RCM2000 above headers J1 and J2 starting with RCM2000 versions marked 175-0201 on the bottom side. These holes facilitate factory testing and must not be used for mounting or attaching other hardware.

A.2 Bus Loading

You must pay careful attention to bus loading when designing an interface to the RCM2000. This section provides bus loading for external devices.

Table A-2 lists the capacitance for the various RCM2000 I/O ports.

Table A-2. Capacitance of RCM2000 I/O Ports

I/O Ports	Input Capacitance (pF)		Output Capacitance (pF)	
	Typ.	Max.	Typ.	Max.
Parallel Ports A to E	6 pF	12 pF	10 pF	14 pF
Data Lines D0–D7	16 pF	30 pF	24 pF	32 pF
Address Lines A0–A12	—	—	24 pF	32 pF

Table A-3 lists the external capacitive bus loading for the various Rabbit 2000 output ports. Be sure to add the loads for the devices you are using in your custom system and verify that they do not exceed the values in Table A-3.

Table A-3. External Capacitive Bus Loading -40°C to +85°C

Output Port	Clock Speed (MHz)	Maximum External Capacitive Loading (pF)
A[12:1] D[7:1]	25.8	50
A[12:1] D[7:1]	18.4	55 for 90 ns flash 100 for 55 ns flash*
A0 D0	25.8, 18.4	100
PD[3:0]	25.8, 18.4,	100
PA[7:0] PB[7,6] PC[6,4,2,0] PD[7:4] PE[7:0]	25.8, 18.4	90
All data, address, and I/O lines with clock doubler disabled	12.9, 9.2	100

* The RCM2020 operating at 18.4 MHz will typically come with a flash EPROM whose access time is 55 ns. Because of the volatility of the memory market, a 90 ns flash EPROM could be used on the RCM2020.

The values from the table above are derived using 55 ns (25.8 MHz version) and 90 ns (18.4 MHz version) memory access times. External capacitive loading can be improved by 10 pF for commercial temperature ranges, but do not exceed 100 pF. See the AC timing specifications in the ***Rabbit 2000 Microprocessor User's Manual*** for more information.

Figure A-4 shows a typical timing diagram for the Rabbit 2000 microprocessor memory read and write cycles.

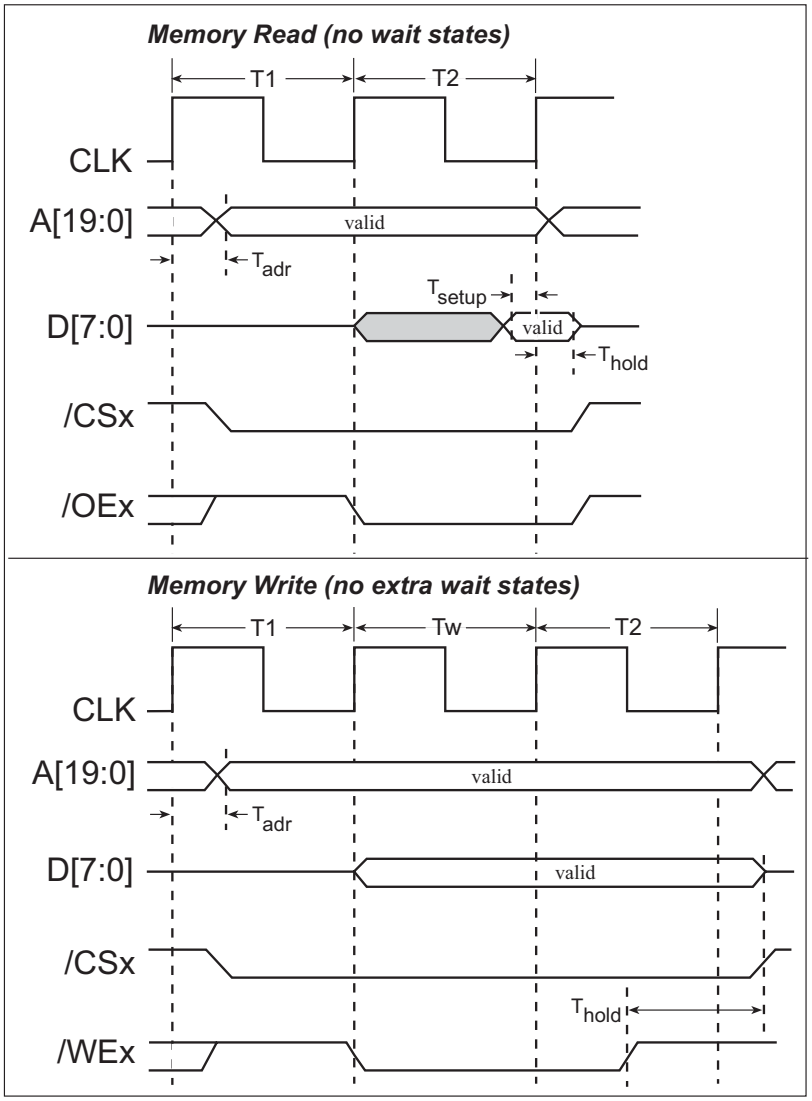

Figure A-4. Memory Read and Write Cycles

T_{adr} is the time required for the address output to reach 0.8 V. This time depends on the bus loading. A0 has a stronger driver and can handle larger capacitive loads than the other address lines. T_{setup} is the data setup time relative to the clock. Tsetup is specified from 30%/70% of the V_{DD} voltage level. Add 1.5 ns to T_{adr} for each 10 pF of additional bus loading above 70 pF.

A.3 Rabbit 2000 DC Characteristics

Table A-4 outlines the DC characteristics for the Rabbit 2000 at 5.0 V over the recommended operating temperature range from T_a = –40°C to +85°C, V_{DD} = 4.5 V to 5.5 V.

Table A-4. 5.0 Volt DC Characteristics

Symbol	Parameter	Test Conditions	Min	Typ	Max	Units
I_{IH}	Input Leakage High	$V_{IN} = V_{DD}$, V_{DD} = 5.5 V			10	µA
I_{IL}	Input Leakage Low (no pull-up)	$V_{IN} = V_{SS}$, V_{DD} = 5.5 V	-10			µA
I_{OZ}	Output Leakage (no pull-up)	$V_{IN} = V_{DD}$ or V_{SS}, V_{DD} = 5.5 V	-10		10	µA
V_{IL}	CMOS Input Low Voltage				0.3 x V_{DD}	V
V_{IH}	CMOS Input High Voltage		0.7 x V_{DD}			V
V_T	CMOS Switching Threshold	V_{DD} = 5.0 V, 25°C		2.4		V
V_{OL}	CMOS Output Low Voltage	I_{OL} = See Table A-5 (sinking) V_{DD} = 4.5 V		0.2	0.4	V
V_{OH}	CMOS Output High Voltage	I_{OH} = See Table A-5 (sourcing) V_{DD} = 4.5 V	0.7 x V_{DD}	4.2		V

A.4 I/O Buffer Sourcing and Sinking Limit

Unless otherwise specified, the Rabbit I/O buffers are capable of sourcing and sinking 8 mA of current per pin at full AC switching speed. Full AC switching assumes a 25.8 MHz CPU clock and capacitive loading on address and data lines of less than 100 pF per pin. Address pin A0 and data pin D0 are rated at 16 mA each. Pins A1–A12 and D1–D7 are each rated at 8 mA. The absolute maximum operating voltage on all I/O is V_{DD} + 0.5 V, or 5.5 V.

Table A-5 shows the AC and DC output drive limits of the parallel I/O buffers when the Rabbit 2000 is used in the RabbitCore 2000.

Table A-5. I/O Buffer Sourcing and Sinking Capability

Pin Name	Output Drive Sourcing*/Sinking† Limits (mA)	
Output Port Name	*Full AC Switching* SRC/SNK	*Maximum‡ DC Output Drive* SRC/SNK
PA [7:0]	8/8	12/12
PB [7, 1, 0]	8/8	12/12
PC [6, 4, 2, 0]	8/8	12/12
PD [7:4]	8/8	12/12
PD [3:0]**	16/16	12/25
PE [7:0]	8/8	12/12

* The maximum DC sourcing current for I/O buffers between V_{DD} pins is 112 mA.

† The maximum DC sinking current for I/O buffers between V_{SS} pins is 150 mA.

‡ The maximum DC output drive on I/O buffers must be adjusted to take into consideration the current demands made my AC switching outputs, capacitive loading on switching outputs, and switching voltage.

The current drawn by all switching and nonswitching I/O must not exceed the limits specified in the first two footnotes.

** The combined sourcing from Port D [7:0] may need to be adjusted so as not to exceed the 112 mA sourcing limit requirement specified in the first footnote.

Some of the values listed are different from those listed in the ***Rabbit 2000 Microprocessor User's Manual*** to take into account external loading of the Rabbit 2000 while it is part of the RCM2000. Loads that exceed the values listed above need to be buffered.

A.5 Conformal Coating

The area around the crystal oscillator has had the Dow Corning silicone-based 1-2620 conformal coating applied. The conformally coated area is shown in Figure A-5. The conformal coating protects these high-impedance circuits from the effects of moisture and contaminants over time.

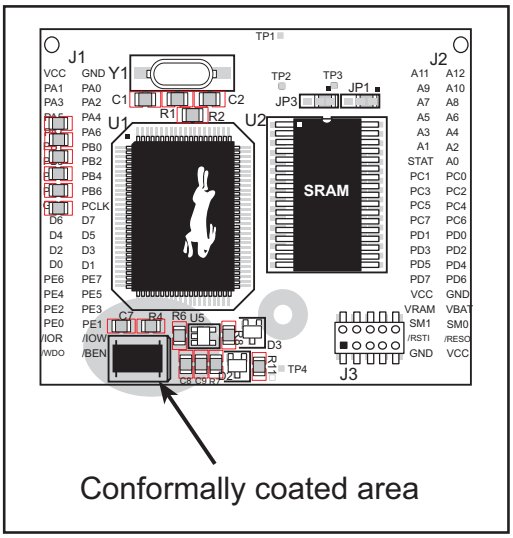

Figure A-5. RCM2000 Areas Receiving Conformal Coating

Any components in the conformally coated area may be replaced using standard soldering procedures for surface-mounted components. A new conformal coating should then be applied to offer continuing protection against the effects of moisture and contaminants.

NOTE: For more information on conformal coatings, refer to Rabbit Technical Note TN303, ***Conformal Coatings***.

A.6 Jumper Configurations

Figure A-6 shows the header locations used to configure the various RCM2000 options via jumpers.

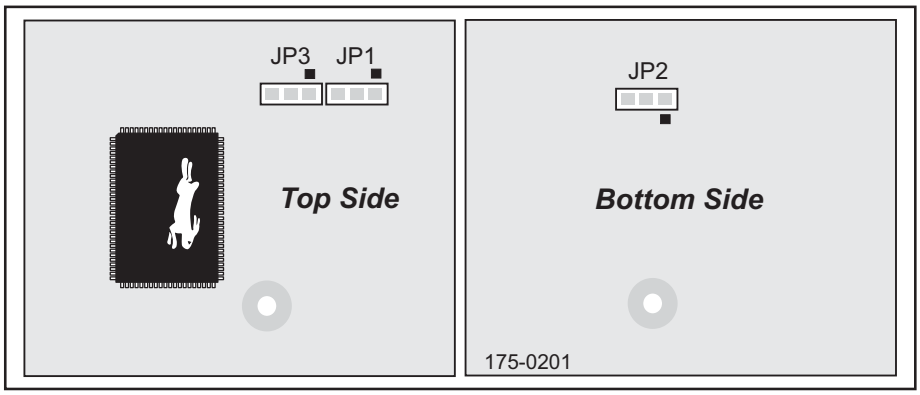

Figure A-6. Location of RCM2000 Configurable Positions

Table A-6 lists the configuration options.

Table A-6. RCM2000 Jumper Configurations

Header	Description	Pins Connected		Factory Default
JP1	SRAM Size	1–2	128K/256K	RCM2010 RCM2020
		2–3	512K	RCM2000
JP2	Flash Memory Size	1–2	128K/256K	✕
		2–3	512K	
JP3	Flash Memory Bank Select	1–2	Normal Mode	✕
		2–3	Bank Mode	

NOTE: The jumper connections are made using 0 Ω surface-mounted resistors.

APPENDIX B. PROTOTYPING BOARD

Appendix B describes the features and accessories of the Prototyping Board, and explains the use of the Prototyping Board to demonstrate the RCM2000 and to build prototypes of your own circuits.

B.1 Overview of the Prototyping Board

The Prototyping Board included in the Development Kit makes it easy to connect an RCM2000 module to a power supply and a PC workstation for development. It also provides an array of basic I/O peripherals (switches and LEDs), as well as a prototyping area for more advanced hardware development.

For the most basic level of evaluation and development, the Prototyping Board can be used without modification.

As you progress to more sophisticated experimentation and hardware development, modifications and additions can be made to the board without modifying or damaging the RCM2000 itself.

The Prototyping Board is shown in Figure B-1 below, with its main features identified.

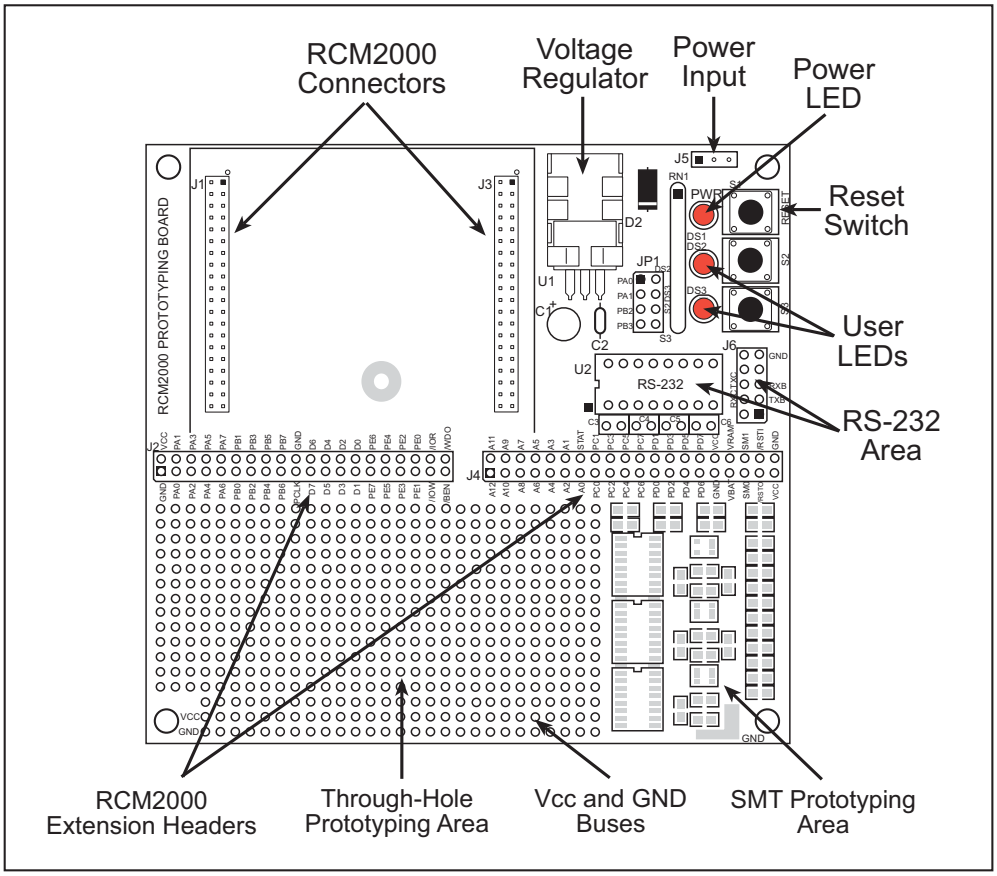

Figure B-1. RCM2000 Prototyping Board

B.2 Mechanical Dimensions and Layout

Figure B-2 shows the mechanical dimensions and layout for the RCM2000 Prototyping Board.

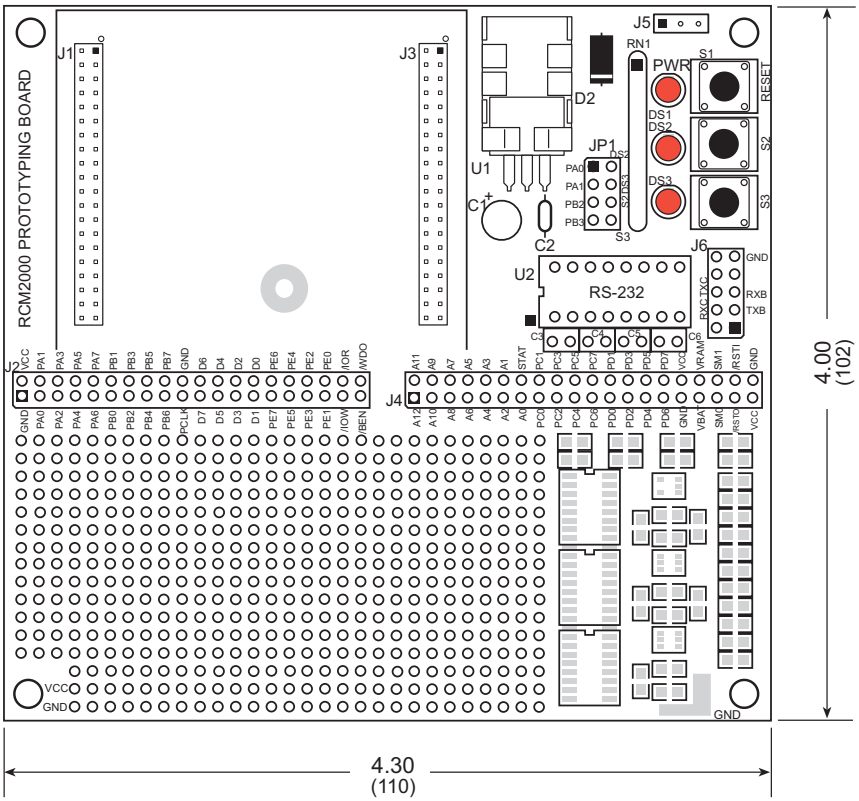

Figure B-2. RCM2000 Prototyping Board Dimensions

Table B-1 lists the electrical, mechanical, and environmental specifications for the Prototyping Board.

Table B-1. Prototyping Board Specifications

Parameter	Specification
Board Size	4.00" × 4.30" × 1.19" (102 mm × 110 mm × 30 mm)
Operating Temperature	–40°C to +70°C
Humidity	5% to 95%, noncondensing
Input Voltage	7.5 V to 25 V DC
Maximum Current Draw (including user-added circuits)	1 A at 12 V and 25°C, 0.7 A at 12 V and 70ºC
Prototyping Area	2" × 3" (51 mm × 76 mm) throughhole, 0.1" spacing
Standoffs/Spacers	4, accept 6-32 × 3/8 screws

B.3 Power Supply

The RCM2000 requires a regulated 5 V ± 0.25 V DC power source to operate. Depending on the amount of current required by the application, different regulators can be used to supply this voltage.

The Prototyping Board has an onboard LM340-T5 or equivalent. The LM340-T5 is an inexpensive linear regulator that is easy to use. Its major drawback is its inefficiency, which is directly proportional to the voltage drop across it. The voltage drop creates heat and wastes power.

A switching power supply may be used in applications where better efficiency is desirable. The LM2575 is an example of an easy-to-use switcher. This part greatly reduces the heat dissipation of the regulator. The drawback in using a switcher is the increased cost.

The Prototyping Board itself is protected against reverse polarity by a Shottky diode at D2 as shown in Figure B-3.

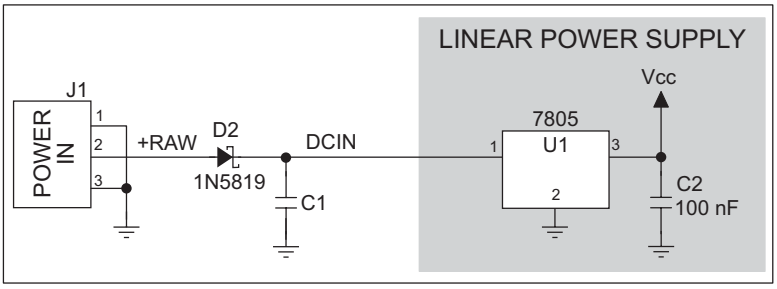

Figure B-3. Prototyping Board Power Supply

Capacitor C1 provides surge current protection for the voltage regulator, and allows the external power supply to be located some distance away.

B.4 Using the Prototyping Board

The Prototyping Board is actually both a demonstration board and a prototyping board. As a demonstration board, it can be used to demonstrate the functionality of the RCM2000 right out of the box without any modifications to either board. There are no jumpers or dip switches to configure or misconfigure on the Prototyping Board so that the initial setup is very straightforward.

The Prototyping Board comes with the basic components necessary to demonstrate the operation of the RCM2000. Two LEDs (DS2 and DS3) are connected to PA0 and PA1, and two switches (S2 and S3) are connected to PB2 and PB3 to demonstrate the interface to the Rabbit 2000 microprocessor. Reset switch S1 is the hardware reset for the RCM2000.

To maximize the availability of RCM2000 resources, the demonstration hardware (LEDs and switches) on the Prototyping Board may be disconnected. This is done by cutting the traces below the silk-screen outline of header JP1 on the bottom side of the Prototyping Board. Figure B-4 shows the four places where cuts should be made. An exacto knife would work nicely to cut the traces. Alternatively, a small standard screwdriver may be carefully and forcefully used to wipe through the PCB traces.

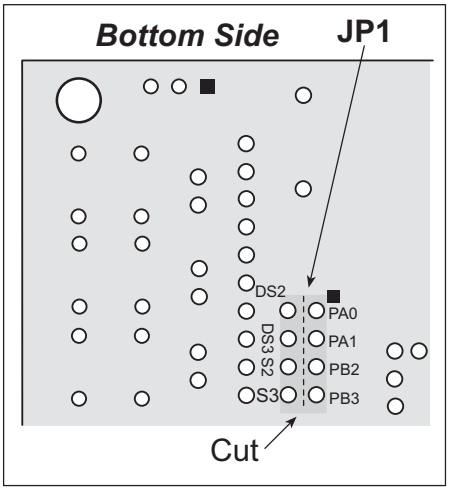

Figure B-4. Where to Cut Traces to Permanently Disable Demonstration Hardware on Prototyping Board

The power LED (PWR) and the RESET switch remain connected. Jumpers across the appropriate pins on header JP1 can be used to reconnect specific demonstration hardware later if needed.

Table B-2. Prototyping Board Jumper Settings

Header JP2	
Pins	**Description**
1–2	PA0 to LED DS2
3–4	PA1 to LED DS3
5–6	PB2 to Switch S2
7–8	PB3 to Switch S3

Note that the pinout at location JP1 on the bottom side of the Prototyping Board (shown in Figure B-4) is a mirror image of the top side pinout.

The Prototyping Board provides the user with RCM2000 connection points brought out conveniently to labeled points at headers J2 and J4 on the Prototyping Board. Small to medium circuits can be prototyped using point-to-point wiring with 20 to 30 AWG wire between the prototyping area and the holes at locations J2 and J4. The holes are spaced at 0.1" (2.5 mm), and 40-pin headers or sockets may be installed at J2 and J4. The pinouts for locations J1 and J3, which correspond to J2 and J4, are shown in Figure B-5.

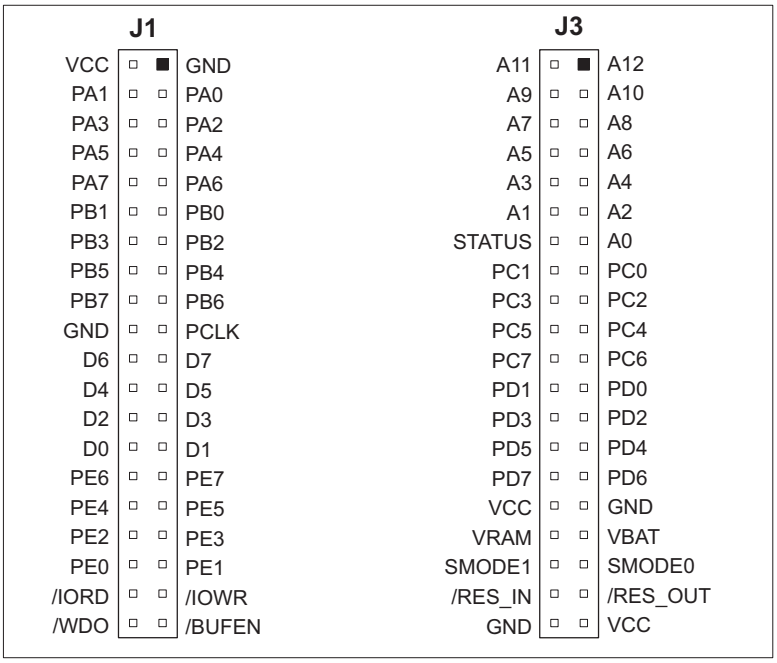

Figure B-5. RCM2000 Prototyping Board Pinout (Top View)

A pair of small holes capable of holding 30 AWG wire appears to the side of each hole pair at locations J2 and J4 for convenience of point-to-point wiring when headers are installed. The signals are those of the adjacent pairs of holes at J2 and J4. These small holes are also provided for the components that may be installed below location J4.

There is an additional 2" × 3" of through-hole prototyping space available on the Prototyping Board. VCC and GND traces run along the edge of the Prototyping Board for easy access. A GND pad is also provided at the lower right for alligator clips or probes.

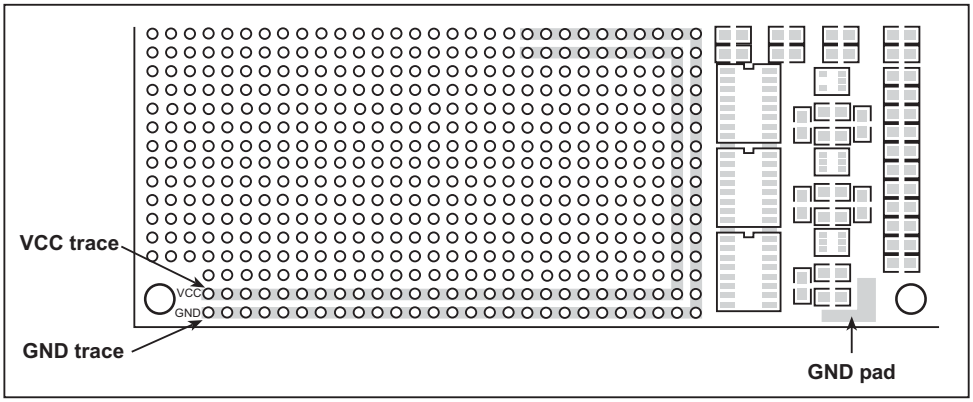

Figure B-6. VCC and GND Traces Along Edge of Prototyping Board

B.4.1 Adding Other Components

There is room on the Prototyping Board for a user-supplied RS-232 transceiver chip at location U2 and a 10-pin header for serial interfacing to external devices at location J6. A Maxim MAX232 transceiver is recommended. When adding the MAX232 transceiver at position U2, you must also add 100 nF charge storage capacitors at positions C3–C6 as shown in Figure B-7.

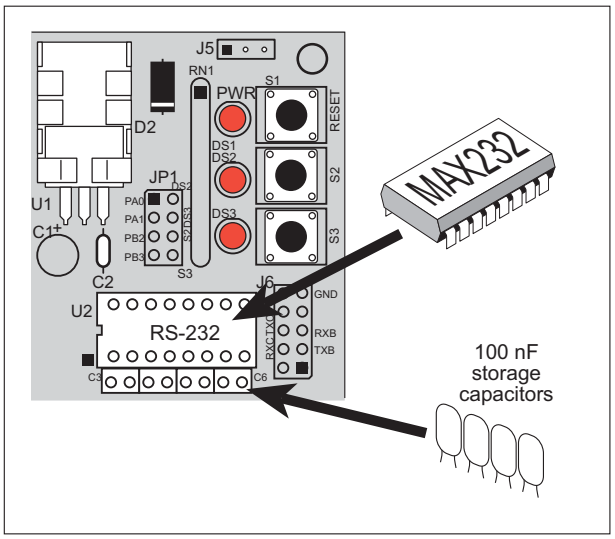

Figure B-7. Location for User-Supplied RS-232 Transceiver and Charge Storage Capacitors

There are two sets of pads that can be used for surface mount prototyping SOIC devices. The silk screen layout separates the rows into six 16-pin devices (three on each side). However, there are pads between the silk screen layouts giving the user two 52-pin (2x26) SOIC layouts with 50 mil pin spacing. There are six sets of pads that can be used for 3- to 6-pin SOT23 packages. There are also 60 sets of pads that can be used for SMT resistors and capacitors in an 0805 SMT package. Each component has every one of its pin pads connected to a hole in which a 30 AWG wire can be soldered (standard wire wrap wire can be soldered in for point-to-point wiring on the Prototyping Board). Because the traces are very thin, carefully determine which set of holes is connected to which surface mount pad.

APPENDIX C. POWER MANAGEMENT

Appendix C describes the RCM2000 power circuitry.

C.1 Power Supplies

The RCM2000 requires a regulated 5 V ± 0.25 V DC power source.

An RCM2000 with no loading at the outputs operating at 18.432 MHz typically draws 88 mA, and an RCM2000 operating at 25.8048 MHz typically draws 120 mA. The RCM2000 will consume 13 mA to 15 mA of additional current when the programming cable is used to connect J3 to a PC.

C.1.1 Batteries and External Battery Connections

The RCM2000 does not have a battery, but there is provision for a customer-supplied battery to back up SRAM and keep the internal Rabbit 2000 real-time clock running.

Header J2, shown in Figure C-1, allows access to the external battery. This header makes it possible to connect an external 3 V power supply. This allows the SRAM and the internal Rabbit 2000 real-time clock to retain data with the RCM2000 powered down.

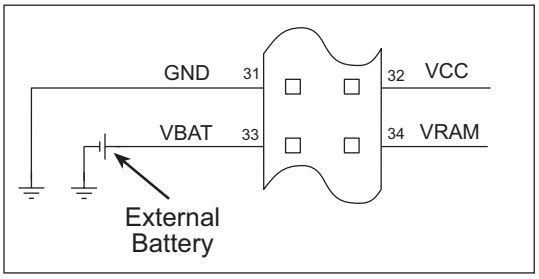

Figure C-1. External Battery Connections at Header J2

A lithium battery with a nominal voltage of 3 V and a minimum capacity of 165 mA·h is recommended. A lithium battery is strongly recommended because of its nearly constant nominal voltage over most of its life.

The drain on the battery by the RCM2000 is typically 10 µA when no other power is supplied. If a 950 mA·h battery is used, the battery can last more than 6 years:

$$\frac{950\ \text{mA}\cdot\text{h}}{10\ \mu\text{A}} = 10.8\ \text{years (shelf life = 10 years).}$$

Since the shelf life of the battery is 10 years, the battery can last for its full shelf life. The actual life in your application will depend on the current drawn by components not on the RCM2000 and the storage capacity of the battery.

C.1.2 Battery-Backup Circuit

The battery-backup circuit serves three purposes:

- It reduces the battery voltage to the SRAM and to the real-time clock, thereby limiting the current consumed by the real-time clock and lengthening the battery life.
- It ensures that current can flow only ***out*** of the battery to prevent charging the battery.
- A voltage, VOSC, is supplied to U5, which keeps the 32.768 kHz oscillator working when the voltage begins to drop.

VRAM and Vcc are nearly equal (<100 mV, typically 10 mV) when power is supplied to the RCM2000.

Figure C-2 shows the RCM2000 battery-backup circuit.

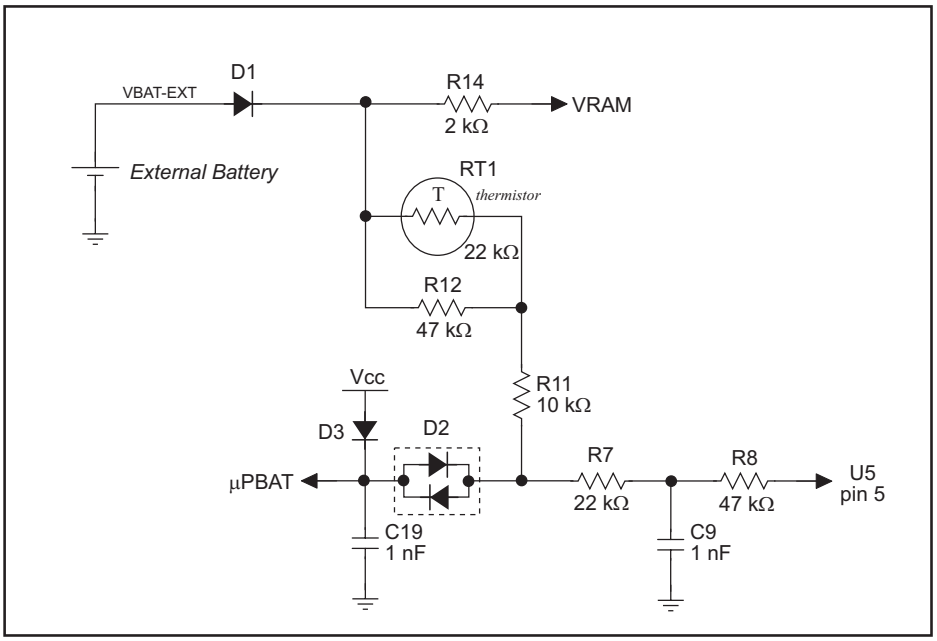

Figure C-2. RCM2000 Battery-Backup Circuit

VRAM is also available on pin 34 of header J2 to facilitate battery backup of the external circuit. Note that the recommended minimum resistive load at VRAM is 100 kΩ, and new battery life calculations should be done to take external loading into account.

C.1.3 Power to VRAM Switch

The VRAM switch, shown in Figure C-3, allows a customer-supplied external battery to provide power when the external power goes off. The switch provides an isolation between Vcc and the battery when Vcc goes low. This prevents the Vcc line from draining the battery.

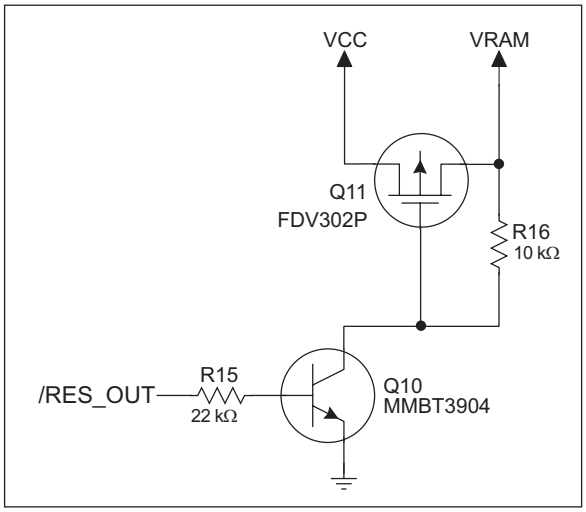

Figure C-3. VRAM Switch

Transistor Q11 is needed to provide a very small voltage drop between Vcc and VRAM (<100 mV, typically 10 mV) so that the processor lines powered by Vcc will not have a significantly different voltage than VRAM.

When the RCM2000 is not resetting (pin 2 on U10 is high), the /RES_OUT line will be high. This turns on Q10, causing its collector to go low. This turns on Q11, allowing VRAM to nearly equal Vcc.

When the RCM2000 is resetting, the /RES_OUT line will go low. This turns off Q10 and Q11, providing an isolation between Vcc and VRAM.

The battery-backup circuit keeps VRAM from dropping below 2 V.

C.1.4 Reset Generator

The RCM2000 uses a reset generator, U10, to reset the Rabbit 2000 microprocessor when the voltage drops below the voltage necessary for reliable operation. The reset occurs between 4.50 V and 4.75 V, typically 4.63 V. The RCM2000 has a reset output, pin 37 on header J3, presented to the headers. The reset generator has a reset input, pin 38 on header J3, that can be used to force the RCM2000 to reset.

C.2 Chip Select Circuit

Figure C-4 shows a schematic of the chip select circuit.

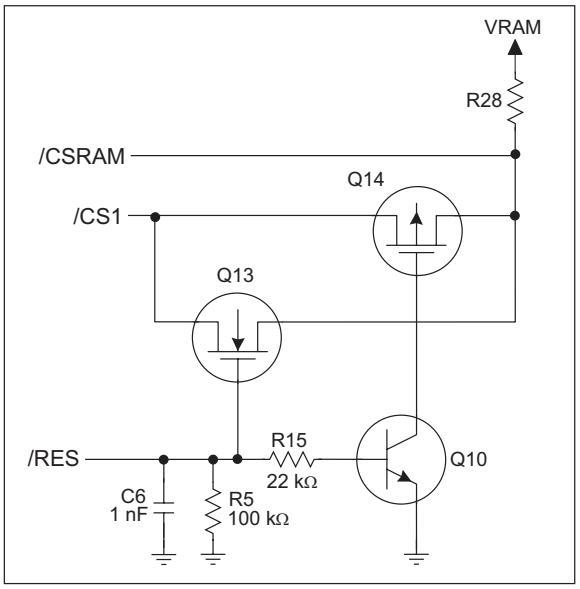

Figure C-4. Chip Select Circuit

The current drain on the battery in a battery-backed circuit must be kept to a minimum. When the RCM2000 is not powered, the battery keeps the SRAM memory contents and the real-time clock (RTC) going. The SRAM has a powerdown mode that greatly reduces power consumption. This powerdown mode is activated by raising the chip select (CS) signal line. Normally the SRAM requires Vcc to operate. However, only 2 V is required for data retention in powerdown mode. Thus, when power is removed from the circuit, the battery voltage needs to be provided to both the SRAM power pin and to the CS signal line. The CS control circuit accomplishes this task for the CS signal line.

In a powered-up condition, the CS control circuit must allow the processor's chip select signal /CS1 to control the SRAM's CS signal /CSRAM. So, with power applied, /CSRAM must be the same signal as /CS1, and with power removed, /CSRAM must be held high (but only needs to be battery voltage high). Q13 and Q14 are MOSFET transistors with opposing polarity. They are both turned on when power is applied to the circuit. They allow the CS signal to pass from the processor to the SRAM so that the processor can periodically access the SRAM. When power is removed from the circuit, the transistors will turn off and isolate /CSRAM from the processor. The isolated /CSRAM line has a 100 kΩ pullup resistor to VRAM (R28). This pullup resistor keeps /CSRAM at the VRAM voltage level (which under no-power conditions is the backup battery's regulated voltage at a little more than 2 V).

Transistors Q13 and Q14 are of opposite polarity so that a rail-to-rail voltages can be passed. When the /CS1 voltage is low, Q13 will conduct. When the /CS1 voltage is high, Q14 will conduct. It takes time for the transistors to turn on, creating a propagation delay. This delay is typically very small, about 10 ns to 15 ns.

APPENDIX D. SAMPLE CIRCUITS

Appendix D provides these sample circuits that incorporate the RCM2000.

- RS-232/RS-485 Serial Communication
- Keypad and LCD Connections
- LCD Connections
- External Memory
- Simple D/A Converter

D.1 RS-232/RS-485 Serial Communication

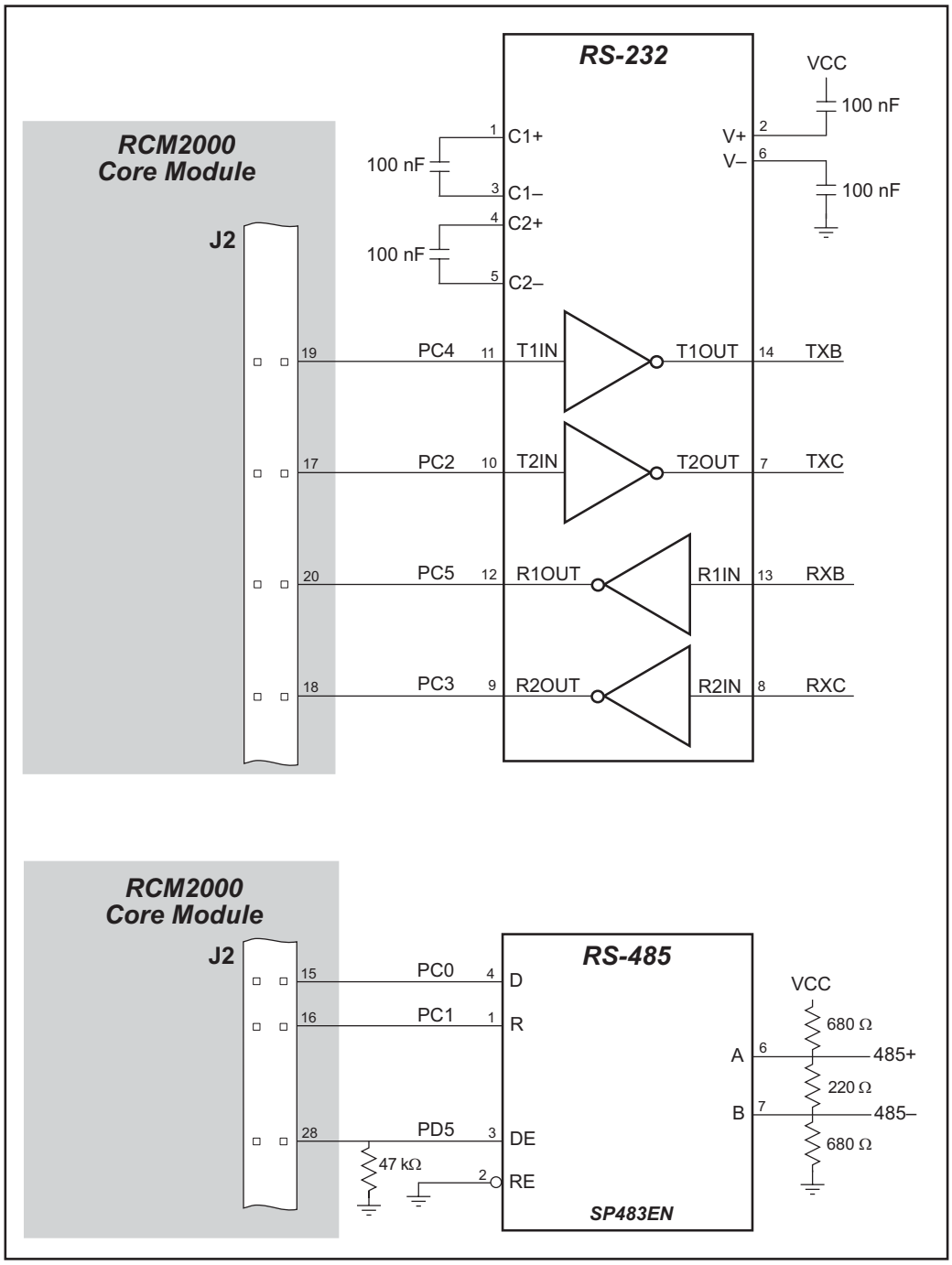

Figure D-1. Sample RS-232 and RS-485 Circuits

Sample Program: **`PUTS.C`** in **`SAMPLES\SERIAL`**.

D.2 Keypad and LCD Connections

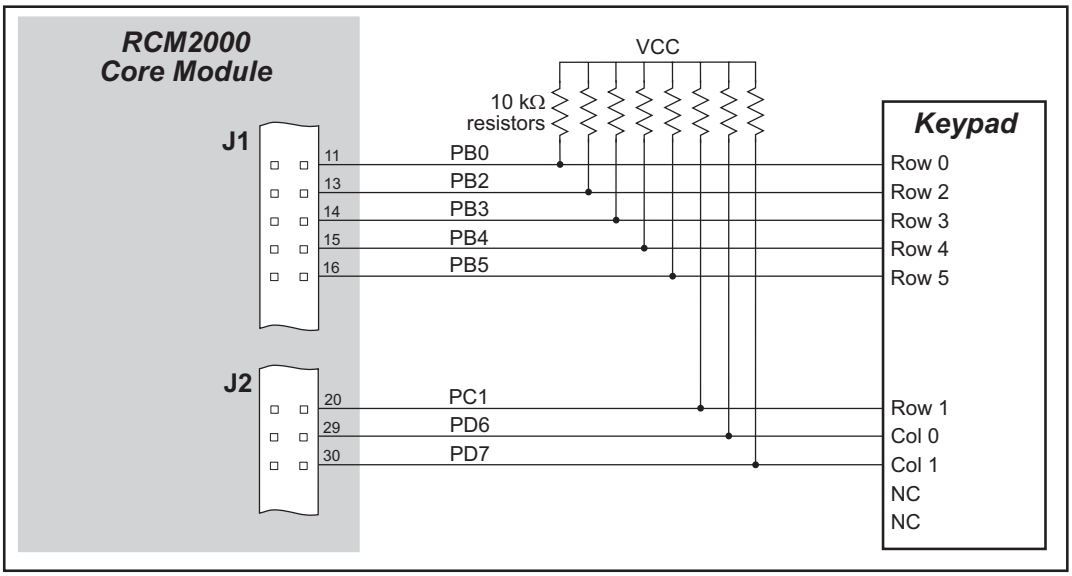

Figure D-2. Sample Keypad Connections

Sample Program: **KEYLCD.C** in **SAMPLES\COREMODULE**.

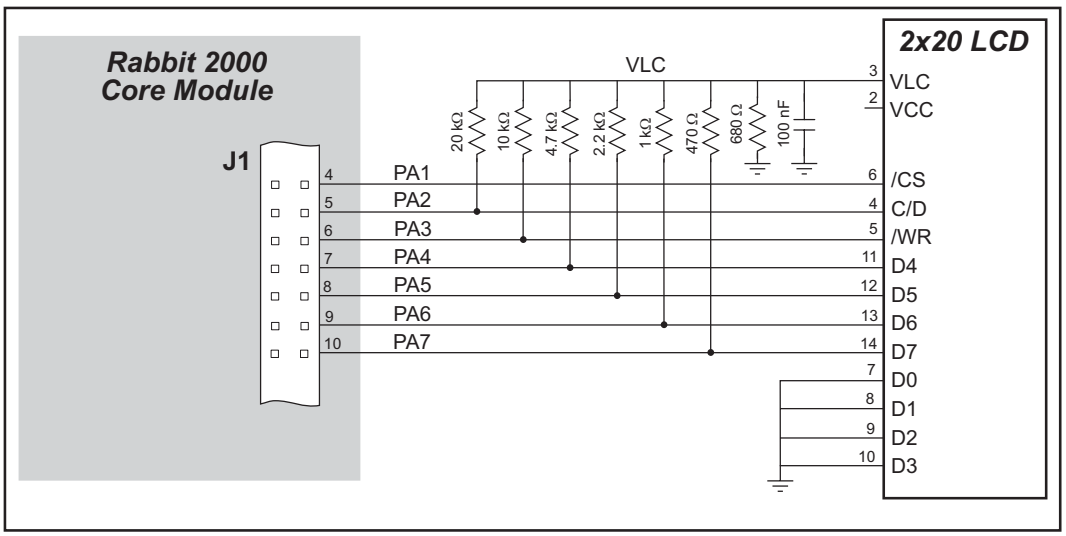

Figure D-3. Sample LCD Connections

Sample Program: **KEYLCD.C** in **SAMPLES\COREMODULE**.

D.3 LCD Connections

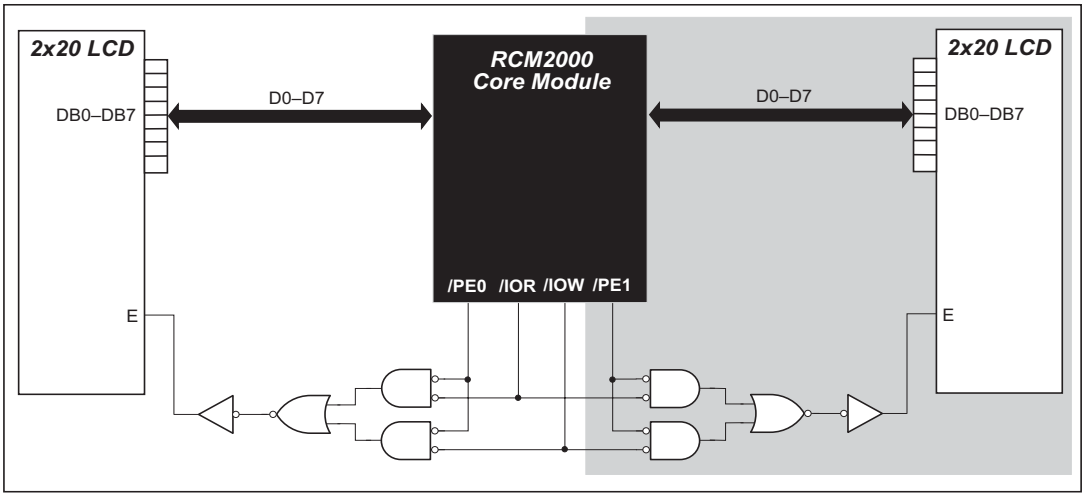

Figure D-4. Sample LCD Connections

Sample Program: **`LCD_DEMO.C`** in **`SAMPLES\COREMODULE`**.

The shaded part of the circuit in Figure D-4 can be used to drive a second LCD, but additional software not included in **`LCD_DEMO.C`** will have to be written.

D.4 External Memory

The sample circuit can be used with an external 64 Kbit memory device. Larger SRAMs can be written to using this scheme by using other available Rabbit 2000 ports (parallel ports A to E) as address lines.

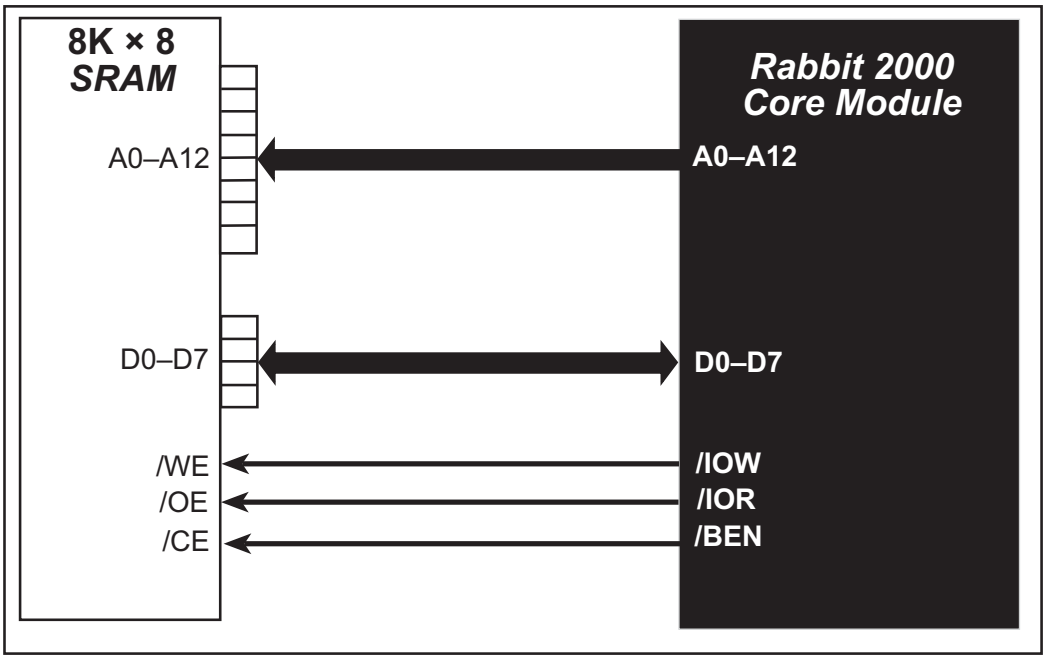

Figure D-5. Sample External Memory Connections

Sample Program: `EXTSRAM.C` in `SAMPLES\COREMODULE`.

D.5 Simple D/A Converter

The output will initially be 0 V to -10.05 V after the first inverting op-amp, and 0 V to +10.05 V after the second inverting op-amp. All lows produce 0 V out, FF produces 10 V out. The output can be scaled by changing the feedback resistors on the op-amps. For example, changing 5.11 kΩ to 2.5 kΩ will produce an output from 0 V to -5 V (first stage) and 0 V to 5 V (second stage). Op-amps with a very low input offset voltage are recommended.

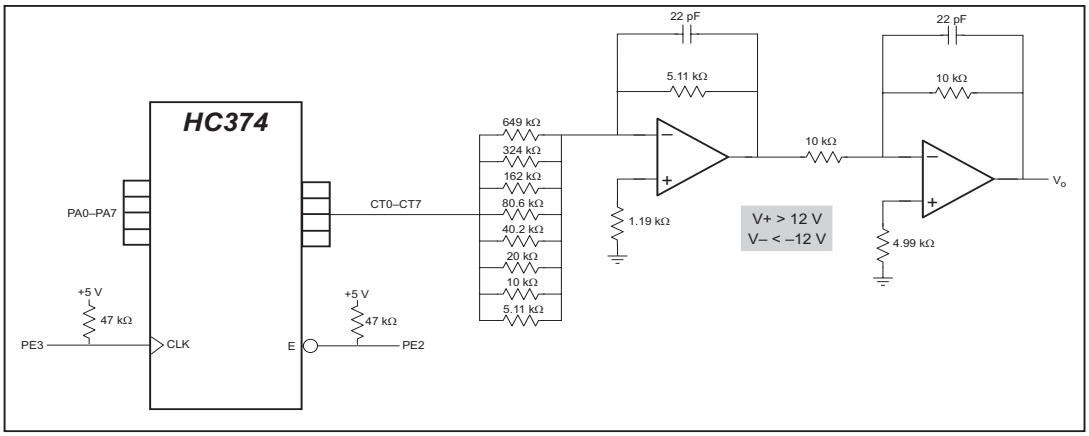

Figure D-6. Sample D/A Converter Connections

A sample program is not available at this time.

INDEX

A

additional information
  online documentation 4

B

battery backup
  reset generator 65
battery life 64
bus loading 46

C

clock doubler 32
conformal coating 50

D

Development Kit 3
  RCM2000 3
digital I/O 23
  I/O buffer sourcing and sinking limits 49
  memory interface 28
  SMODE0 29
  SMODE1 29
digital inputs 27
digital outputs 27
dimensions
  Prototyping Board 55
  RCM2000 42
Dynamic C 3, 35
  add-on modules 40
  features 14
  multitasking 15
  Rabbit Embedded Security Pack 40
  sample programs 11
    break point 13
    editing a program 14
    single-stepping 13
    watch expressions 13
  standard features 36
    debugging 37
  telephone-based technical support 40
  upgrades and patches 40
  USB port settings 9

E

EMI
  spectrum spreader feature . 33
exclusion zone 43

F

features 1
  Prototyping Board 54
flash memory addresses
  user blocks 34

H

hardware connections 6
  install RCM2000 on Prototyping Board 6
  power supply 8
  programming cable 7
hardware reset 8

I

I/O buffer sourcing and sinking limits 49

J

jumper configurations 51
  JP1 (SRAM size) 51
  JP2 (flash memory size) 51
  JP3 (flash memory bank select) 34, 51
  jumper locations 51

M

manuals 4

P

PCLK output 38
pinout
  Prototyping Board 59
  RCM2000 24
    alternate configurations 25, 26
power supplies
  +5 V 63
  battery backup 63, 64
  battery life 64
power supply
  connections 8
programming cable
  PROG connector 30
  RCM2000 connections 7
programming port 29
Prototyping Board 53, 54
  adding components 61
  dimensions 55
  features 54
  mounting RCM2000 6
  pinout 59
  power supply 57
  prototyping area 59, 60
  specifications 56

R

Rabbit subsystems 23
RCM2000
  mounting on Prototyping Board 6
reset 8

S

sample circuits 67
  D/A converter 72
  external memory 71
  keypad and LCD connections 69
  LCD connections 70
  RS-232/RS-485 serial communication 68

sample programs 11
FLASHLED.C 12
getting to know the RCM2000
EXTSRAM.C 18
FLASHLED.C 18
FLASHLED2.C 18
FLASHLEDS.C 19
FLASHLEDS2.C 19
KEYLCD.C 19
LCD_DEMO.C 20
SWTEST.C 20
TOGGLELED.C 20
PONG.C 9
serial communication
CORE_FLOWCONTROL.C 21
CORE_PARITY.C 21
serial communication 28
serial ports 28
programming port 29
software
I/O drivers 38
libraries
PACKET.LIB 39
RS232.LIB 39
PCLK output 38
serial communication drivers 39
specifications 41
bus loading 46
digital I/O buffer sourcing and sinking limits 49
dimensions 42
electrical, mechanical, and environmental 44
exclusion zone 43
header footprint 45
headers 45
Prototyping Board 56
Rabbit 2000 DC characteristics 48
Rabbit 2000 timing diagram 47
relative pin 1 locations 45
spectrum spreader 33
subsystems
digital inputs and outputs .. 23

T

technical support 10
troubleshooting
changing COM port 9
connections 9

U

USB/serial port converter 7
Dynamic C settings 9
user block
function calls
readUserBlock 34
writeUserBlock 34

SCHEMATICS

090-0097 RCM2000 Schematic

www.rabbit.com/documentation/schemat/090-0097.pdf

090-0099 RCM2000 Prototyping Board Schematic

www.rabbit.com/documentation/schemat/090-0099.pdf

090-0128 Programming Cable Schematic

www.rabbit.com/documentation/schemat/090-0128.pdf

You may use the URL information provided above to access the latest schematics directly.