Excellent Integrated System Limited

Stocking Distributor

Click to view price, real time Inventory, Delivery & Lifecycle Information:

Molex Connector Corporation
0622018630

For any questions, you can email us directly:
sales@integrated-circuit.com

I-Trac™ Vertical Power Module Installation (Right Angle) Press-In Tool

molex

Application Tooling Specification Sheet

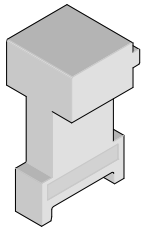

Order No. 62201-8630

FEATURES

- Vertical Power Module must be installed separately
- Use as a stand-alone tool or mounted in an optional holder with other Molex press-in tools.
- Guide surface provided for positive alignment to connector assembly
- Tool provides uniform distribution of press force across entire pin array

SCOPE

Products: I-Trac™ Vertical Power Module Assembly 78227 Series, 7 Row Assemblies. See Product List below for specific part numbers.

Product List

The following is a partial list of the product order numbers and their specifications this tool is designed to run. Updates to this list are available on www.molex.com.

Vertical Power Module Series Number	Row	Assembly Order Number	
78227	7	78227-1001	78227-5001

Tool Setup

Depending on the number of connectors to be installed and/or the press used, this tool can be used as a stand-alone or with a group of press-in tools, mounted in a 62201-95XX rail (ordered separately). See Figure 1.

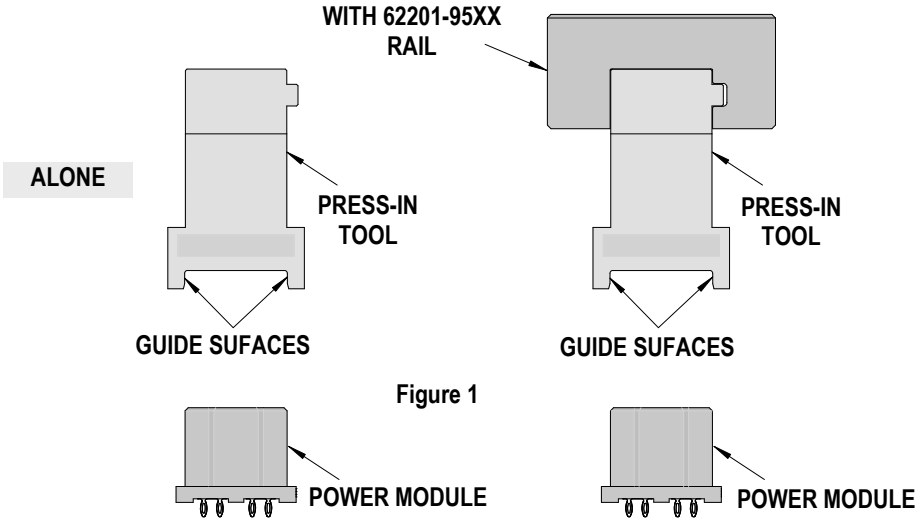

Figure 1

Tool Installation

The 62201-95XX rail is available in a variety of lengths to accommodate multiple press-in tools.

Rail Part Number	Rail Overall Length
62201-9501	24mm (0.94 in)
62201-9502	72mm (2.83 in)
62201-9503	156mm (6.14 in)
62201-9504	216mm (8.50 in)
62201-9509	254mm (10.0 in)
62201-9511	305mm (12.0 in)

Reference: The 62201-8630 Press-In Tool is 19.0mm (0.75 in.) wide x 30.50 (1.20 in.) long.

Printed Circuit Board (PCB) Support

The I-Trac™ connectors require up to 6.0kg (13.2 lbs) of force per pin to press into the PCB. To prevent flexing or damage to the PCB, a support plate is strongly recommended directly beneath the connector terminal hole pattern.

Due to the custom nature of every application, a board support is required for proper tool application. This can be supplied by the customer or by Molex. For more information contact Molex Application Tooling.

When creating a PCB support plate, allow clearance for connector terminal pins that pass through the PCB.

Press Equipment Recommendations

Many types of presses can be used to install I-Trac™ connectors, but to assure consistent connector installation Molex recommends the following press criteria:

1. The capability to detect force variations as low as 4.5kg (10 lb) during the press-in cycle; excessive force measurements should stop the press-in cycle.
2. The rate of pressing can be regulated as low as 0.13mm (0.005 in) per second.
3. Press stroke control to within 0.25mm (0.010 in).
4. Total press stroke must be at least 19mm (0.75 in).
5. For statistical purposes, automatic collection of force and distance data.

Tool Operation

1. Carefully insert, by hand, the vertical power module(s) into the PCB hole pattern. Make sure the connector(s) are oriented properly to the PCB layout.
2. Line-up the Press-In tool so that the guide surfaces on the tool are in line with the sides of the vertical power module. See Figure 2.

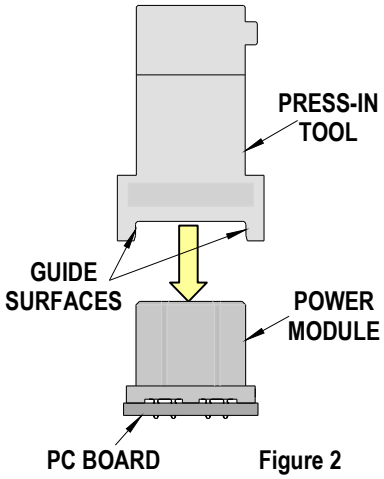

Figure 2

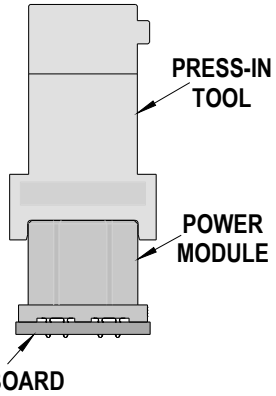

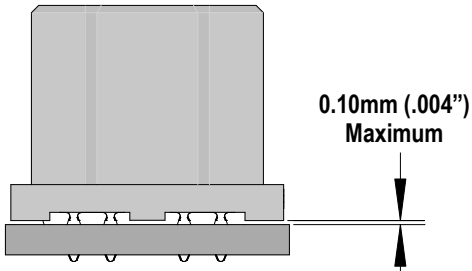

Figure 3

3. Using the application tool and an appropriate press, seat the vertical power module until there is less than 0.10mm (.004 in) clearance between the bottom of the plastic housing and the surface of the PCB. See Figure 3.

CAUTION: To prevent injury, never operate any press without the guards in place. Refer to the press manufacturer’s instruction manual.

CAUTION: Molex application tooling specifications are valid only when used with Molex connectors and tooling.

Contact Information

For more information on Molex application tooling please contact Molex at 1-800-786-6539.

http://www.molex.com