Excellent Integrated System Limited

Stocking Distributor

Click to view price, real time Inventory, Delivery & Lifecycle Information:

Molex Connector Corporation
0868006541

For any questions, you can email us directly:
sales@integrated-circuit.com

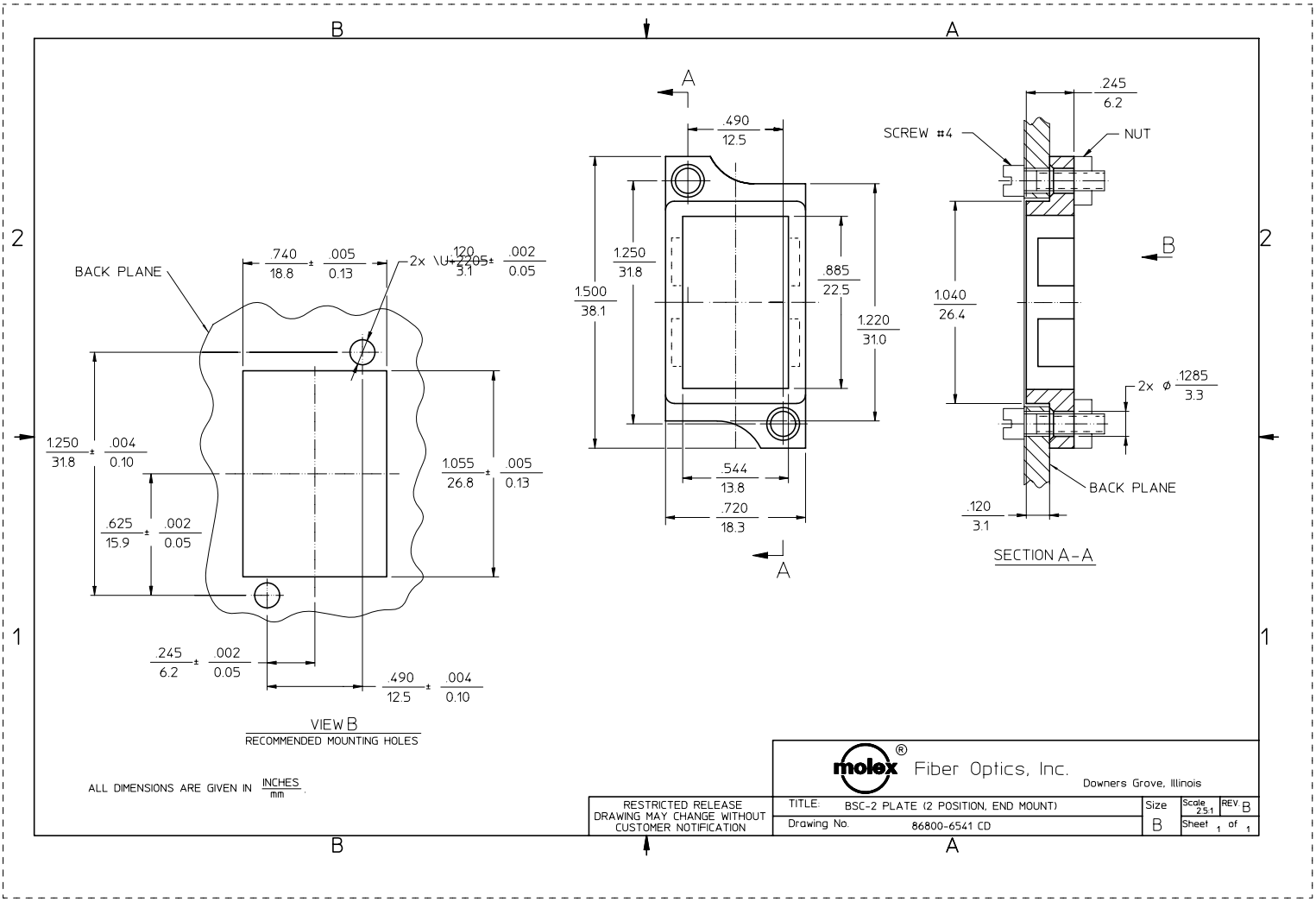
BACK PLANE
.740 / 18.8 ± .005 / 0.13
2x .120 / 3.1 ± .002 / 0.05
1.250 / 31.8 ± .004 / 0.10
.625 / 15.9 ± .002 / 0.05
1.055 / 26.8 ± .005 / 0.13
.245 / 6.2 ± .002 / 0.05
.490 / 12.5 ± .004 / 0.10
VIEW B
RECOMMENDED MOUNTING HOLES
ALL DIMENSIONS ARE GIVEN IN INCHES / mm.
.490 / 12.5
1.250 / 31.8
1.500 / 38.1
.885 / 22.5
1.220 / 31.0
.544 / 13.8
.720 / 18.3
.245 / 6.2
SCREW #4
NUT
1.040 / 26.4
2x ø .1285 / 3.3
BACK PLANE
.120 / 3.1
SECTION A-A
molex® Fiber Optics, Inc.
Downers Grove, Illinois
RESTRICTED RELEASE
DRAWING MAY CHANGE WITHOUT
CUSTOMER NOTIFICATION
TITLE: BSC-2 PLATE (2 POSITION, END MOUNT)
Drawing No. 86800-6541 CD
Size B
Scale 2:1
REV B
Sheet 1 of 1