# Excellent Integrated System Limited

Stocking Distributor

Click to view price, real time Inventory, Delivery & Lifecycle Information:

Molex Connector Corporation
0876322001

For any questions, you can email us directly:
sales@integrated-circuit.com

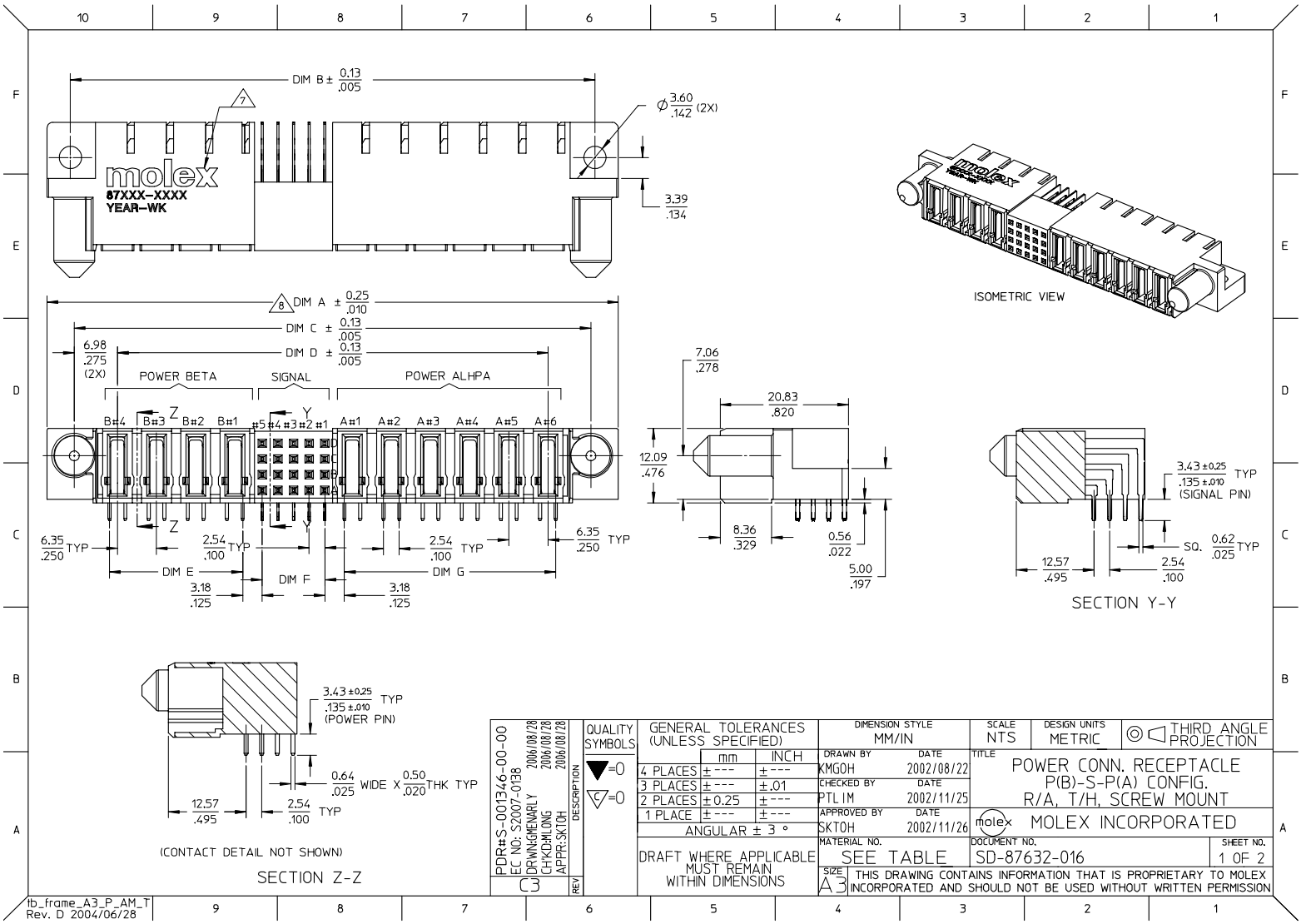
DIM B ± 0.13/.005
Ø 3.60/.142 (2X)
3.39/.134
molex
87XXX-XXXX
YEAR-WK
ISOMETRIC VIEW
DIM A ± 0.25/.010
DIM C ± 0.13/.005
DIM D ± 0.13/.005
6.98/.275 (2X)
POWER BETA
SIGNAL
POWER ALHPA
B#4 B#3 B#2 B#1 #5 #4 #3 #2 #1 A#1 A#2 A#3 A#4 A#5 A#6
6.35/.250 TYP
2.54/.100 TYP
DIM E
DIM F
DIM G
3.18/.125
7.06/.278
20.83/.820
12.09/.476
8.36/.329
0.56/.022
5.00/.197
3.43 ±0.25/.135 ±.010 TYP (SIGNAL PIN)
SQ. 0.62/.025 TYP
12.57/.495
SECTION Y-Y
3.43 ±0.25/.135 ±.010 TYP (POWER PIN)
0.64/.025 WIDE X 0.50/.020 THK TYP
(CONTACT DETAIL NOT SHOWN)
SECTION Z-Z
PDR#S-001346-00-00
EC NO: S2007-0138
DRWN:GMENARLY 2006/08/28
CHKD:MLONG 2006/08/28
APPR:SKTOH 2006/08/28
DESCRIPTION
REV
C3
QUALITY SYMBOLS
=0
=0
GENERAL TOLERANCES (UNLESS SPECIFIED)
mm INCH
4 PLACES ±--- ±---
3 PLACES ±--- ±.01
2 PLACES ±0.25 ±---
1 PLACE ±--- ±---
ANGULAR ± 3 °
DRAFT WHERE APPLICABLE MUST REMAIN WITHIN DIMENSIONS
DIMENSION STYLE MM/IN
SCALE NTS
DESIGN UNITS METRIC
THIRD ANGLE PROJECTION
DRAWN BY KMGOH DATE 2002/08/22
CHECKED BY PTLIM DATE 2002/11/25
APPROVED BY SKTOH DATE 2002/11/26
TITLE
POWER CONN. RECEPTACLE
P(B)-S-P(A) CONFIG.
R/A, T/H, SCREW MOUNT
MOLEX INCORPORATED
MATERIAL NO. SEE TABLE
DOCUMENT NO. SD-87632-016
SHEET NO. 1 OF 2
SIZE A3
THIS DRAWING CONTAINS INFORMATION THAT IS PROPRIETARY TO MOLEX INCORPORATED AND SHOULD NOT BE USED WITHOUT WRITTEN PERMISSION
tb_frame_A3_P_AM_T
Rev. D 2004/06/28

| ASSEMBLY PART NUMBER | P-S-P CONFIGURATION POWER BETA | SIGNAL | POWER ALPHA | DIM A | DIM B | DIM C | DIM D | DIM E | DIM F | DIM G | RECESSED POWER CIRCUIT | VOID PIN LOCATION | PACKAGING |
|---|---|---|---|---|---|---|---|---|---|---|---|---|---|
| 87632-2001 | 2 | 24 | 2 | 57.15 / 2.250 | 49.53 / 1.950 | 48.26 / 1.900 | 34.29 / 1.350 | 8.89 / .350 | 12.70 / .500 | 8.89 / .350 | NIL | NIL | TRAY |
| 87632-2002 | 2 | 12 | 2 | 49.53 / 1.950 | 41.91 / 1.650 | 40.64 / 1.600 | 26.67 / 1.050 | 8.89 / .350 | 5.08 / .200 | 8.89 / .350 | | | |
| 87632-2003 | 4 | 20 | 4 | 80.01 / 3.150 | 72.39 / 2.850 | 71.12 / 2.800 | 57.15 / 2.250 | 21.59 / .850 | 10.16 / .400 | 21.59 / .850 | | | |
| 87632-2007 | 4 | 28 | 6 | 97.79 / 3.850 | 90.17 / 3.550 | 88.90 / 3.500 | 74.93 / 2.950 | 21.59 / .850 | 15.24 / .600 | 34.29 / 1.350 | A3,A4,A5,A6 B1,B2,B3,B4 | A7,B7,C7,D7 | |
| 87632-2008 | 4 | 24 | 6 | 95.25 / 3.750 | 87.63 / 3.450 | 86.36 / 3.400 | 72.39 / 2.850 | 21.59 / .850 | 12.70 / .500 | 34.29 / 1.350 | NIL | NIL | |
| 87632-2009 | 4 | 24 | 6 | 95.25 / 3.750 | 87.63 / 3.450 | 86.36 / 3.400 | 72.39 / 2.850 | 21.59 / .850 | 12.70 / .500 | 34.29 / 1.350 | A3,A4,A5,A6 | | |

NOTES

1. MATERIALS :-
   HOUSING - LCP. GLASS FILLED. UL94V-0.
   COLOR : BLACK.
   SIGNAL TERMINAL - COPPER ALLOY
   POWER TERMINAL - COPPER ALLOY
2. FINISH :-
   SIGNAL & POWER CONTACTS
   0.76um MIN. GOLD (Au) AT CONTACT AREA AND 2.54um MIN. TIN
   AT SOLDERTAIL AREA OVER 1.27um MIN. NICKEL (Ni) UNDERPLATE.
3. PRODUCT SPECIFICATION : PS-87631-006.

4. COMPONENT STAY AWAY ZONE FROM CONNECTOR.
5. PCB NOTE FOR DIAMETER 1.02/.040 PLATED HOLE
   - DRILLED HOLE SIZE IS 1.151/.0453
   - PLATE WITH 0.007/.0003 MINIMUM TIN OVER 0.03/.001
   TO 0.08/.003 COPPER PLATING TO ACHIEVE 1.02±0.08/.040±.003 HOLE.
6. ALL TERMINAL TIPS ARE DESIGNED WITH EXPOSE BASE COPPER.
   THIS IS CREATED BY FINAL CUTTING PROCESS PLATING.

7. MANUFACTURER LOGO, PART NUMBER AND YEAR-WEEK CODE.
8. 4 POWER BETA-20SIGNAL-6 POWER ALPHA IS SHOWN FOR ILLUSTRATION.
   POWER-SIGNAL-POWER CONFIGURATION IS AVAILABLE UP TO 203MM/8INCH.
   PLEASE CONTACT MOLEX SALES PERSONNEL FOR OTHER CONFIGURATION
   AND OPTION NEEDED.

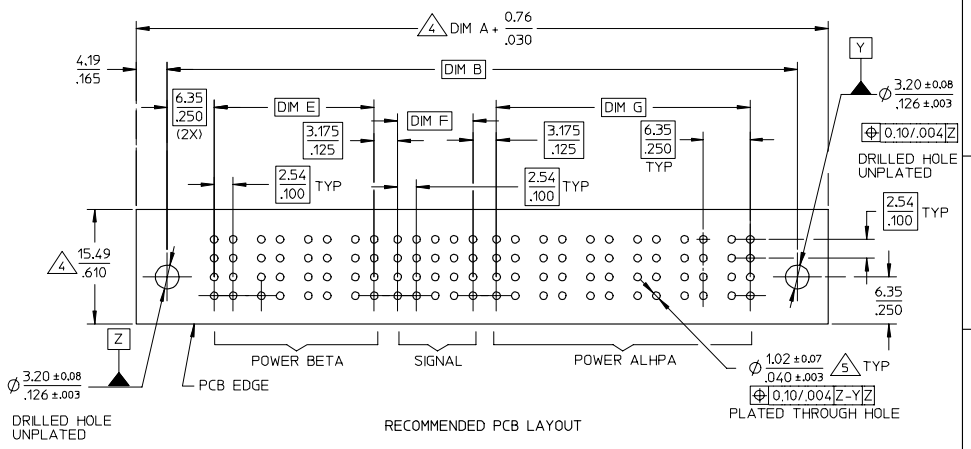


RECOMMENDED PCB LAYOUT

| | | | |
|---|---|---|---|
| PDR#S-001358-00-00 | | | |
| EC NO: S2007-0138 | | | |
| DRAWN:GMENARLY | 2006/08/28 | | |
| CHKD:MLONG | 2006/08/28 | | |
| APPR:SKTOH | 2006/08/28 | | |
| DESCRIPTION | | | |
| REV | | | |
| C3 | | | |

QUALITY SYMBOLS: ▼=0 ▽=0

GENERAL TOLERANCES (UNLESS SPECIFIED)

| | mm | INCH |
|---|---|---|
| 4 PLACES | ± --- | ± --- |
| 3 PLACES | ± --- | ± .01 |
| 2 PLACES | ± 0.25 | ± --- |
| 1 PLACE | ± --- | ± --- |
| ANGULAR ± 3 ° | | |

DRAFT WHERE APPLICABLE MUST REMAIN WITHIN DIMENSIONS

| | | | |
|---|---|---|---|
| DIMENSION STYLE: MM/IN | SCALE: NTS | DESIGN UNITS: METRIC | THIRD ANGLE PROJECTION |
| DRAWN BY: KMGOH | DATE: 2002/08/22 | TITLE: POWER CONN. RECEPTACLE P(B)-S-P(A) CONFIG. R/A, T/H, SCREW MOUNT | |
| CHECKED BY: PTLIM | DATE: 2002/11/25 | | |
| APPROVED BY: SKTOH | DATE: 2002/11/26 | molex MOLEX INCORPORATED | |
| MATERIAL NO.: SEE TABLE | | DOCUMENT NO.: SD-87632-016 | SHEET NO.: 2 OF 2 |
| SIZE: A3 | THIS DRAWING CONTAINS INFORMATION THAT IS PROPRIETARY TO MOLEX INCORPORATED AND SHOULD NOT BE USED WITHOUT WRITTEN PERMISSION | | |

tb_frame_A3_P_AM_T
Rev. D 2004/06/28