Excellent Integrated System Limited

Stocking Distributor

Click to view price, real time Inventory, Delivery & Lifecycle Information:

Molex Connector Corporation
1200651567

For any questions, you can email us directly:
sales@integrated-circuit.com

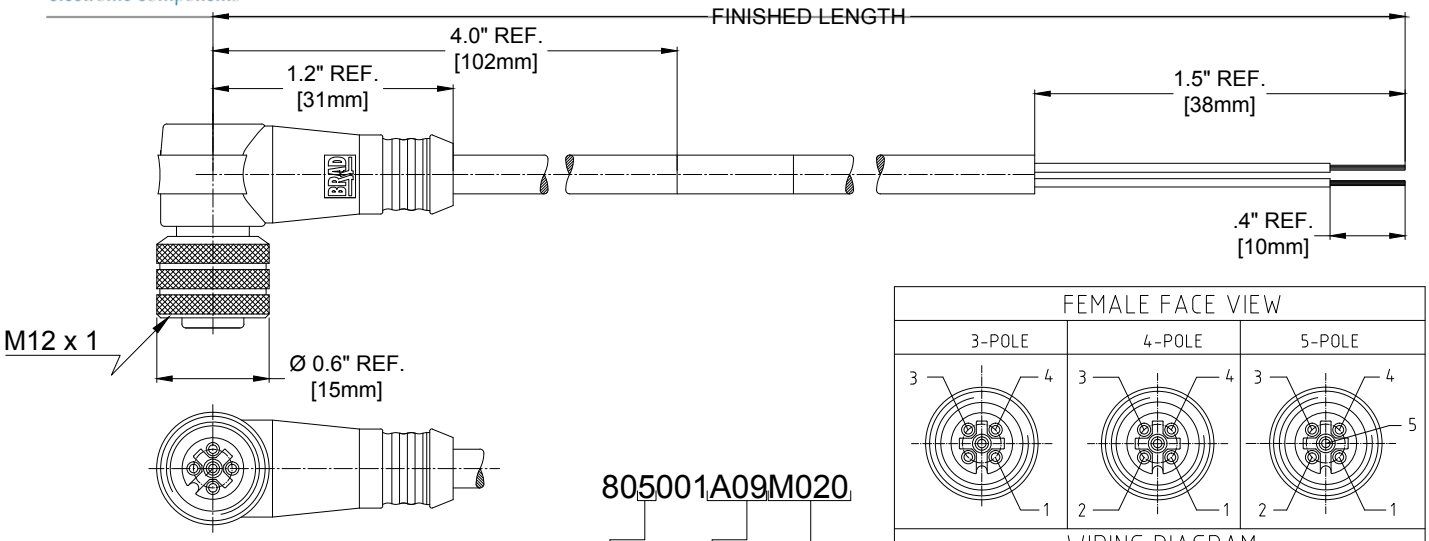

805001A09M020

- no poles: 3-5 pole
- cable type: #22/3-5 PVC YELLOW
- 020----2 Meters, 100----10 Meters

FEMALE FACE VIEW

WIRING DIAGRAM

3-POLE	4-POLE	5-POLE
1 BROWN 3 BLUE 4 BLACK	1 BROWN 2 WHITE 3 BLUE 4 BLACK	1 BROWN 2 WHITE 3 BLUE 4 BLACK 5 GREY

CONNECTOR SPECIFICATION:

VOLTAGE RATING	250 VAC/VDC
AMPERAGE RATING	max. 4 AMPS
PROTECTION	IP67
OPERATING TEMPERATURE	-20°C TO 105°C
UL CERTIFICATIONS	UL RECOGNIZED, FILE NO. E152210
ASSEMBLY	RoHS COMPLIANT

COMPONENT	MATERIAL	FINISH
LABEL	MYLAR	BLACK/YELLOW
O-RING	VITON	RED
COUPLER	BRASS	NICKEL PLATED
PIN CONTACT	COPPER ALLOY	GOLD OVER NICKEL
INSERT	NYLON	BLACK
OVERMOLD	PUR	YELLOW
CABLE- 22/3-5 (COPPER STRANDING) 3/4/5 CONDUCT. 300V	JACKET: PVC	JACKET: YELLOW

MATERIAL NUMBER	ENGINEERING NUMBER	FINISHED LENGTH
1200651444	803001A09M020	6.56' +3.5" -0 [2.0M +89 -0]
1200651551	804001A09M020	6.56' +3.5" -0 [2.0M +89 -0]
1200651697	805001A09M020	6.56' +3.5" -0 [2.0M +89 -0]
1200651567	804001A09M100	32.81' +12.5" -0 [10.0M +318 -0]

REV	DESCRIPTION	
A	UPDATED FOR PART MATRIX EC NO: IPG2014-0988 DRWN: GGUSTAFS CHKD: TWOLDEGE APPR: BWOODMAN	2010/01/25 11/26/13 —

QUALITY SYMBOLS: ▼ = 0; ▽ = 0

GENERAL TOLERANCES (UNLESS SPECIFIED)

	mm	INCH
4 PLACES	±---	±---
3 PLACES	±---	±.005
2 PLACES	±.13	±.010
1 PLACE	±.25	±.020
ANGULAR ±	.5 °	

DRAFT WHERE APPLICABLE MUST REMAIN WITHIN DIMENSIONS

DIMENSION STYLE: IN/MM	SCALE: NTS	DESIGN UNITS: INCH
THIRD ANGLE PROJECTION		
DRAWN BY: GGUSTAFS	DATE: 2013/11/26	MICRO-CHANGE CORDSET 3-5 POLE FEMALE 90D 22/AWG YELLOW PVC CABLE
CHECKED BY: RE	DATE: 2010/01/21	
APPROVED BY: NSTAUDIG	DATE: 2010/01/25	MOLEX INCORPORATED
MATERIAL NO.: SEE CHART	DOCUMENT NO.: SD-120065-027	SHEET NO.: 1 OF 1
SIZE: A3		

THIS DRAWING CONTAINS INFORMATION THAT IS PROPRIETARY TO MOLEX INCORPORATED AND SHOULD NOT BE USED WITHOUT WRITTEN PERMISSION