Excellent Integrated System Limited

Stocking Distributor

Click to view price, real time Inventory, Delivery & Lifecycle Information:

Molex Connector Corporation
38760-0114

For any questions, you can email us directly:
sales@integrated-circuit.com

38760

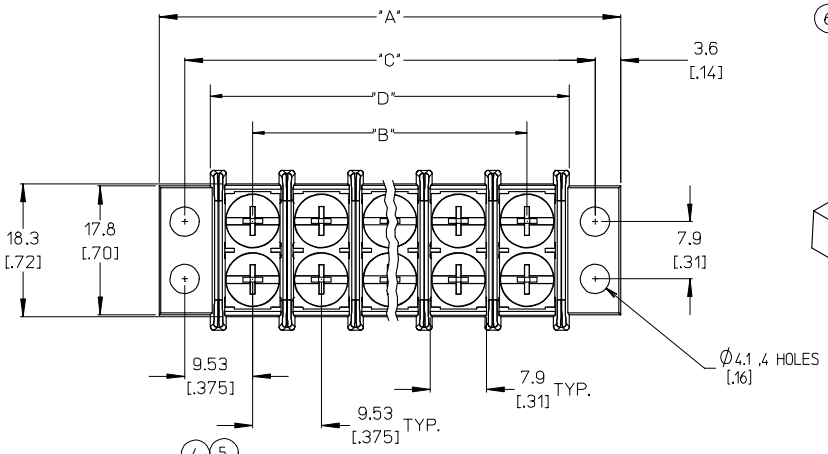

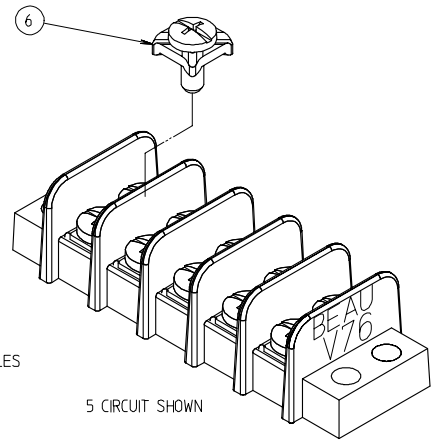

5 CIRCUIT SHOWN

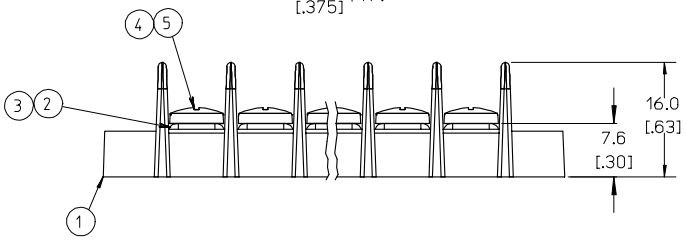

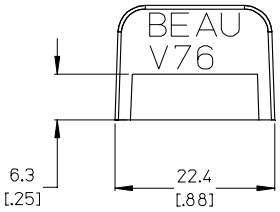

NOTES:
1. MATERIAL: SEE TABLE
2. FINISHES: SEE TABLE
3. PRODUCT SPECIFICATION: NOT REQUIRED
4. PACKAGING: NOT REQUIRED
5. MATES WITH: NONE
6. "XX" REFERS TO THE QUANTITY OF CIRCUITS.
7. INCH DIMENSIONS ARE SHOWN IN BRACKETS [.XXX].
8. ASSEMBLY IS ROHS COMPLIANT.

ITEM	QTY	DESCRIPTION	MATERIAL	FINISH
6	XX×2	SCREW, #6-32X.250, PAN HD, PH-SL W/WSHR (-50 OPTION)	STEEL	ZINC W/CHROMATE
5	XX×2	SCREW, #6-32X.250, BGHD, PHIL-SLOT (-49 OPTION)	BRASS	NICKEL
4	XX×2	SCREW, #6-32X.250, BGHD, PHIL-SLOT (STANDARD)	STEEL	ZINC W/CHROMATE
3	XX	TERMINAL PLATE (-49 OPTION)	BRASS	TIN
2	XX	TERMINAL PLATE	BRASS	NICKEL
1	1	INSULATOR	THERMOPLASTIC	BLACK

REV	DESCRIPTION	
C	ADDED -49 & -50 OPTION EC NO: ETC2007-0195	
	DRWN:EHILE	2006/11/13
	CHKD:JMACNEIL	2006/11/13
	APPR:JMACNEIL	2006/11/13

QUALITY SYMBOLS
▼=0
▽=0

GENERAL TOLERANCES (UNLESS SPECIFIED)

	mm	INCH
4 PLACES	± ---	±.0015
3 PLACES	±0.038	±.005
2 PLACES	±0.13	±.01
1 PLACE	±0.3	±---
ANGULAR ± 2 °		

DRAFT WHERE APPLICABLE MUST REMAIN WITHIN DIMENSIONS

DIMENSION STYLE: MM/IN
SCALE: 2:1
DESIGN UNITS: INCH
THIRD ANGLE PROJECTION

DRAWN BY: R. KEMP DATE: 2002/10/10
CHECKED BY: P. WALTZ DATE: 2002/10/14
APPROVED BY: L. ROTHAUS DATE: 2002/10/14

TITLE: 9.53MM [.375] DOUBLE ROW BTS ASSEMBLY

molex MOLEX INCORPORATED

MATERIAL NO.: SEE CHART
DOCUMENT NO.: SD-38760-001
SHEET NO.: 1 OF 2
SIZE: B

THIS DRAWING CONTAINS INFORMATION THAT IS PROPRIETARY TO MOLEX INCORPORATED AND SHOULD NOT BE USED WITHOUT WRITTEN PERMISSION

tb_frame_B_P_ME_T
Rev. D 2004/04/02

38760

NO. OF CIRCUITS "XX"	DIM. "A"	DIM. "B"	DIM. "C"	DIM. "D"	ASSEMBLY MATERIAL NO. (STANDARD)	ASSEMBLY MATERIAL NO. (-49 OPTION) ©	ASSEMBLY MATERIAL NO. (-50 OPTION) ©
2	35.7 [1.41]	9.53 [.375]	28.6 [1.13]	21.3 [.84]	38760-0102	387600202	387600302
3	45.2 [1.78]	19.05 [.750]	38.1 [1.50]	30.8 [1.21]	38760-0103	387600203	387600303
4	54.7 [2.16]	28.58 [1.125]	47.6 [1.88]	40.3 [1.59]	38760-0104	387600204	387600304
5	64.3 [2.53]	38.10 [1.500]	57.2 [2.25]	49.8 [1.96]	38760-0105	387600205	387600305
6	73.8 [2.91]	47.63 [1.875]	66.7 [2.63]	59.4 [2.34]	38760-0106	387600206	387600306
7	83.3 [3.28]	57.15 [2.250]	76.2 [3.00]	68.9 [2.71]	38760-0107	387600207	387600307
8	92.8 [3.66]	66.68 [2.625]	85.7 [3.38]	78.4 [3.09]	38760-0108	387600208	387600308
9	102.4 [4.03]	76.20 [3.000]	95.3 [3.75]	87.9 [3.46]	38760-0109	387600209	387600309
10	111.9 [4.41]	85.73 [3.375]	104.8 [4.13]	97.5 [3.84]	38760-0110	387600210	387600310
11	121.4 [4.78]	95.25 [3.750]	114.3 [4.50]	107.0 [4.21]	38760-0111	387600211	387600311
12	130.9 [5.16]	104.78 [4.125]	123.8 [4.88]	116.5 [4.59]	38760-0112	387600212	387600312
13	140.5 [5.53]	114.30 [4.500]	133.4 [5.25]	126.0 [4.96]	38760-0113	387600213	387600313
14	150.0 [5.91]	123.83 [4.875]	142.9 [5.63]	135.6 [5.34]	38760-0114	387600214	387600314
15	159.5 [6.28]	133.35 [5.250]	152.4 [6.00]	145.1 [5.71]	38760-0115	387600215	387600315
16	169.0 [6.66]	142.88 [5.625]	161.9 [6.38]	154.6 [6.09]	38760-0116	387600216	387600316
17	178.6 [7.03]	152.40 [6.000]	171.5 [6.75]	164.1 [6.46]	38760-0117	387600217	387600317
18	188.1 [7.41]	161.93 [6.375]	181.0 [7.13]	173.7 [6.84]	38760-0118	387600218	387600318
19	197.6 [7.78]	171.45 [6.750]	190.5 [7.50]	183.2 [7.21]	38760-0119	387600219	387600319
20	207.1 [8.16]	180.98 [7.125]	200.0 [7.88]	192.7 [7.59]	38760-0120	387600220	387600320
21	216.7 [8.53]	190.50 [7.500]	209.6 [8.25]	202.2 [7.96]	38760-0121	387600221	387600321
22	226.2 [8.91]	200.03 [7.875]	219.1 [8.63]	211.8 [8.34]	38760-0122	387600222	387600322
23	235.7 [9.28]	209.55 [8.250]	228.6 [9.00]	221.3 [8.71]	38760-0123	387600223	387600323
24	245.2 [9.66]	219.08 [8.625]	238.1 [9.38]	230.8 [9.09]	38760-0124	387600224	387600324
25	254.8 [10.03]	228.60 [9.000]	247.7 [9.75]	240.3 [9.46]	38760-0125	387600225	387600325
26	264.3 [10.41]	238.13 [9.375]	257.2 [10.13]	249.9 [9.84]	38760-0126	387600226	387600326
27	273.8 [10.78]	247.65 [9.750]	266.7 [10.50]	259.4 [10.21]	38760-0127	387600227	387600327
28	283.3 [11.16]	257.18 [10.125]	276.2 [10.88]	268.9 [10.59]	38760-0128	387600228	387600328
29	292.9 [11.53]	266.70 [10.500]	285.8 [11.25]	278.4 [10.96]	38760-0129	387600229	387600329
30	302.4 [11.91]	276.23 [10.875]	295.3 [11.63]	288.0 [11.34]	38760-0130	387600230	387600330

REV	DESCRIPTION	
C	ADDED -49 & -50 OPTION EC NO: ETC2007-0195	
	DRWN: EHILE	2006/11/13
	CHKD: J MACNEIL	2006/11/13
	APPR: J MACNEIL	2006/11/13

QUALITY SYMBOLS
▼=0
▽=0

GENERAL TOLERANCES (UNLESS SPECIFIED)

	mm	INCH
4 PLACES	± ---	±.0015
3 PLACES	± 0.038	±.005
2 PLACES	± 0.13	±.01
1 PLACE	± 0.3	± ---
ANGULAR ± 2 °		

DRAFT WHERE APPLICABLE MUST REMAIN WITHIN DIMENSIONS

DIMENSION STYLE: MM/IN
SCALE: 2:1
DESIGN UNITS: INCH
THIRD ANGLE PROJECTION

		DATE
DRAWN BY	R. KEMP	2002/10/10
CHECKED BY	P. WALTZ	2002/10/14
APPROVED BY	L. ROTHAUS	2002/10/14

TITLE: 9.53MM [.375] DOUBLE ROW BTS ASSEMBLY

molex MOLEX INCORPORATED

MATERIAL NO.: SEE CHART
DOCUMENT NO.: SD-38760-001
SHEET NO.: 2 OF 2
SIZE: B

THIS DRAWING CONTAINS INFORMATION THAT IS PROPRIETARY TO MOLEX INCORPORATED AND SHOULD NOT BE USED WITHOUT WRITTEN PERMISSION

tb_frame_B_P_ME_T
Rev. D 2004/04/02