Excellent Integrated System Limited

Stocking Distributor

Click to view price, real time Inventory, Delivery & Lifecycle Information:

Essentra Components (formerly Richco, Inc.)
FTH-27-1-01BK

For any questions, you can email us directly:
sales@integrated-circuit.com

REV.	MODIFICATION.	DATE	DRN
01	SALES DRAWING	05/01/09	PH
02	CO 2010548	04/02/09	PH
03	CO 2010788	26/08/09	MT

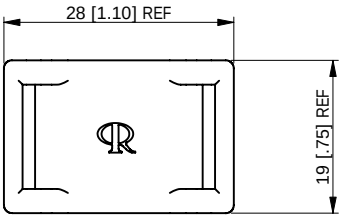

FTH-27-1-01BK

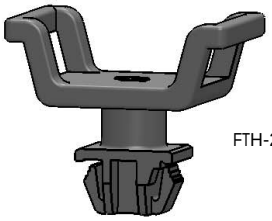

FTH-27-2-01BK

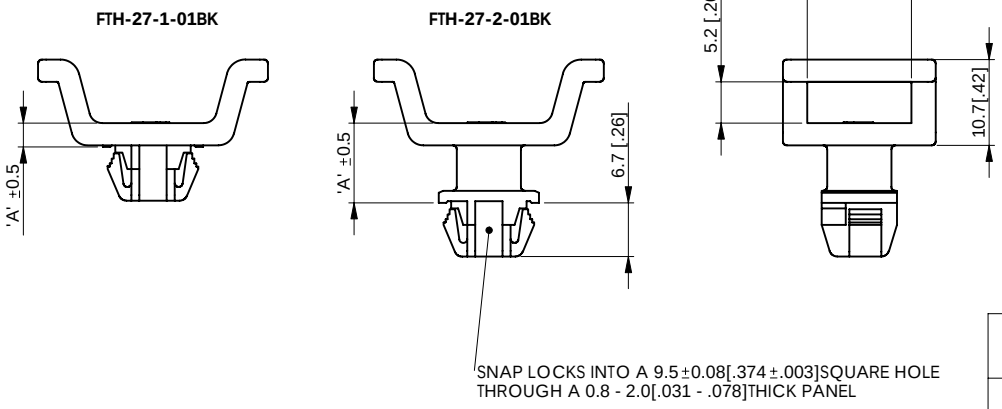

ALTERNATE UNITS FOR REFERENCE ONLY

PART NUMBER	'A' ±0.5 DIMENSION
FTH-27-1-01BK	3 [.12]
FTH-27-2-01BK	10 [.39]

Available in UL94 V-0 material by special order.
To order, replace -01 with -19.

INFORMATION CONTAINED IN THIS DOCUMENT IS CONFIDENTIAL TO RICHCO INTERNATIONAL Co. Ltd. AND MAY NOT BE DISCLOSED OR REPRODUCED IN WHOLE OR PART WITHOUT THEIR WRITTEN CONSENT.

RICHCO, INC.
WWW.RICHCO-INC.COM

ALL DIMENSIONS IN mm
GENERAL TOLERANCES ±0.25
UNLESS OTHERWISE STATED
1 DECIMAL PLACE ±
2 DECIMAL PLACES ±
ANGULAR ±1°

THIRD ANGLE

MATERIAL: NYLON 6/6 UL 94 V-2 (RMS-01)	COLOUR: BLACK
DESCRIPTION: FLAT TIE CABLE HOLDER	PART No: SEE TABLE
DRG No: 09-002 / NPR No: FN08-0005	SHEET SIZE A4

DRN	DATE	CHKD	DATE	SCALE	SHEET No.
PH	05/01/09	TC	05/01/09	NTS	1 OF 1

FORM No. 0143/00