Excellent Integrated System Limited

Stocking Distributor

Click to view price, real time Inventory, Delivery & Lifecycle Information:

CNC Tech
770-20011-00100

For any questions, you can email us directly:
sales@integrated-circuit.com

Distributor of CNC Tech: Excellent Integrated System Limited
Datasheet of 770-20011-00100 - CABLE 2RCA MALE-MALE 1M
Contact us: sales@integrated-circuit.com Website: www.integrated-circuit.com

Units:mm

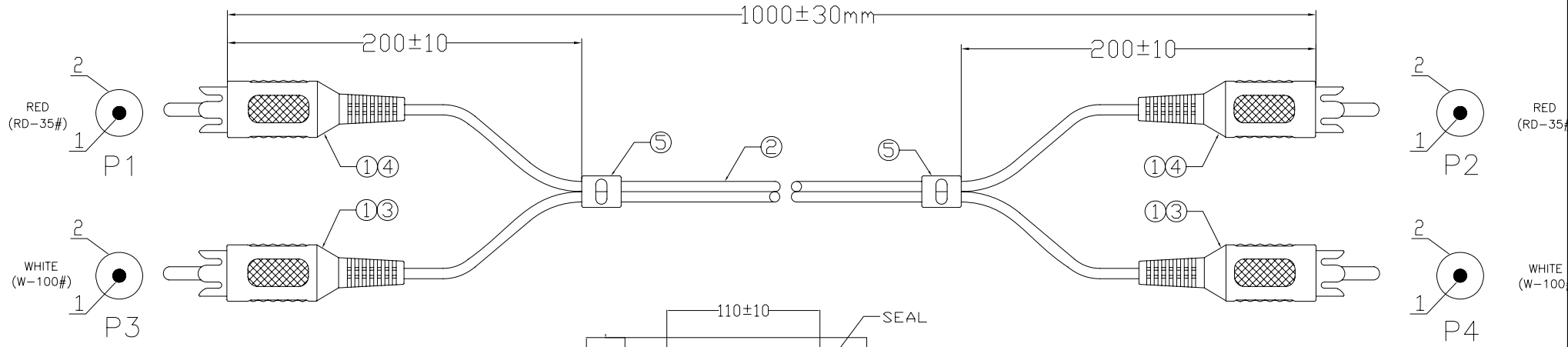

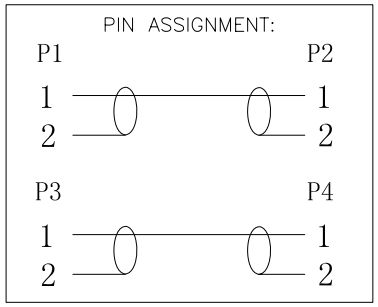

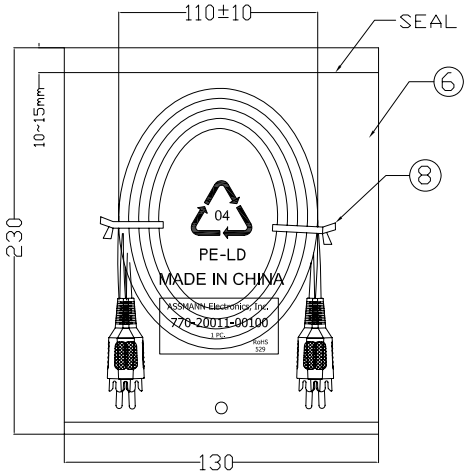

Electrical test:
1.100% short,open,miswire test
2.Conduct resistance:5 Ohm(max)
3.Insulation resistance:10Mohm(min)
4.dielectric test:DC 300V

NO.	NAME	Q'TY	SPECIFICATION
⑧	TIE	2	BLACK L=80mm
⑦	PE BAG	1/10	CLEAR SIZE: 280*330*0.05mm PRINT BLACK"MADE IN CHINA"+"10PCS"
⑥	PE BAG	1	CLEAR SIZE: 130*230*0.05mm PRINT BLACK"MADE IN CHINA"+"1PC"
⑤	S/R	3.0g	BLACK PVC 40P (Mould NO.:SR-048)
④	IN JACKET	1.6g	CLEAR LD-PE (Mould NO.:NM-006)
	OUT JACKET	6.6g	PVC-40P RED(RD-35),(Mould NO.WM-009)
③	IN JACKET	1.6g	CLEAR LD-PE (Mould NO.:NM-006)
	OUT JACKET	6.6g	PVC-40P WHITE(W-100)(Mould NO.WM-009)
②	CABLE	1	NOUL 28#(10/0.10+28/0.10)*2F JACKET BLACK OD2.8*5.6mm
①	CONN	4	RCA PLUG MALE 梅花型 TYPE NI-PLATED INSULATOR COLOR:BROWN

CnC Tech, LLC
Industrial Cable and Connector Technolo

DRAWED BY	LICHENG	DARWING NO.	
CHECKED BY		CUSTOMER	
APPROVAL BY		ITEM NO.	770-20011-00
DECIDE BY		DATE	2012-12-17
VERSIONS/EDITEON	A/0	PROJECTION	