Excellent Integrated System Limited

Stocking Distributor

Click to view price, real time Inventory, Delivery & Lifecycle Information:

ON Semiconductor
NCP4304ADR2G

For any questions, you can email us directly:
sales@integrated-circuit.com

Distributor of ON Semiconductor: Excellent Integrated System Limited
Datasheet of NCP4304ADR2G - IC SEC SIDE SYNC RECT DRV 8SOIC
Contact us: sales@integrated-circuit.com Website: www.integrated-circuit.com

NCP4304A, NCP4304B

Secondary Side Synchronous Rectification Driver for High Efficiency SMPS Topologies

The NCP4304A/B is a full featured controller and driver tailored to control synchronous rectification circuitry in switch mode power supplies. Due to its versatility, it can be used in various topologies such as flyback, forward and Half Bridge Resonant LLC.

The combination of externally adjustable minimum on and off times helps to fight the ringing induced by the PCB layout and other parasitic elements. Therefore, a reliable and noise less operation of the SR system is insured.

The extremely low turn off delay time, high sink current capability of the driver and automatic package parasitic inductance compensation system allow to maximize synchronous rectification MOSFET conduction time that enables further increase of SMPS efficiency.

Finally, a wide operating V_{CC} range combined with two versions of driver voltage clamp eases implementation of the SR system in 24 V output applications.

Features

- Self-Contained Control of Synchronous Rectifier in CCM, DCM, and QR Flyback Applications
- Precise True Secondary Zero Current Detection with Adjustable Threshold
- Automatic Parasitic Inductance Compensation Input
- Typically 40 ns Turn off Delay from Current Sense Input to Driver
- Zero Current Detection Pin Capability up to 200 V
- Optional Ultrafast Trigger Interface for Further Improved Performance in Applications that Work in Deep CCM
- Disable Input to Enter Standby or Low Consumption Mode
- Adjustable Minimum On Time Independent of V_{CC} Level
- Adjustable Minimum Off Time Independent of V_{CC} Level
- 5 A/2.5 A Peak Current Sink/Source Drive Capability
- Operating Voltage Range up to 30 V
- Gate Drive Clamp of Either 12 V (NCP4304A) or 6 V (NCP4304B)
- Low Startup and Standby Current Consumption
- Maximum Frequency of Operation up to 500 kHz
- SOIC−8 Package
- These are Pb−Free Devices

Typical Applications

- Notebook Adapters
- High Power Density AC/DC Power Supplies
- Gaming Consoles
- All SMPS with High Efficiency Requirements

ON Semiconductor®

www.onsemi.com

SOIC−8
D SUFFIX
CASE 751

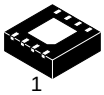

DFN8
MN SUFFIX
CASE 488AF

MARKING DIAGRAMS

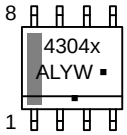

SOIC−8

DFN8

4304x	= Specific Device Code x = A or B
A	= Assembly Location
L	= Wafer Lot
Y	= Year
W	= Work Week
▪	= Pb−Free Package

(*Note: Microdot may be in either location)

PINOUT INFORMATION

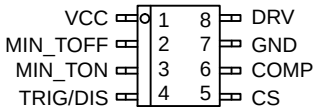

(NOTE: For DFN the exposed pad must be either unconnected or preferably connected to ground. The GND pin must be always connected to ground.)

ORDERING INFORMATION

Device	Package	Shipping†
NCP4304ADR2G	SOIC−8 (Pb−Free)	2,500 / Tape & Reel
NCP4304BDR2G	SOIC−8 (Pb−Free)	2,500 / Tape & Reel
NCP4304AMNTWG	DFN8 (Pb−Free)	4,000 / Tape & Reel
NCP4304BMNTWG	DFN8 (Pb−Free)	4,000 / Tape & Reel

†For information on tape and reel specifications, including part orientation and tape sizes, please refer to our Tape and Reel Packaging Specifications Brochure, BRD8011/D.

© Semiconductor Components Industries, LLC, 2016

March, 2016 − Rev. 6
Publication Order Number:
NCP4304/D

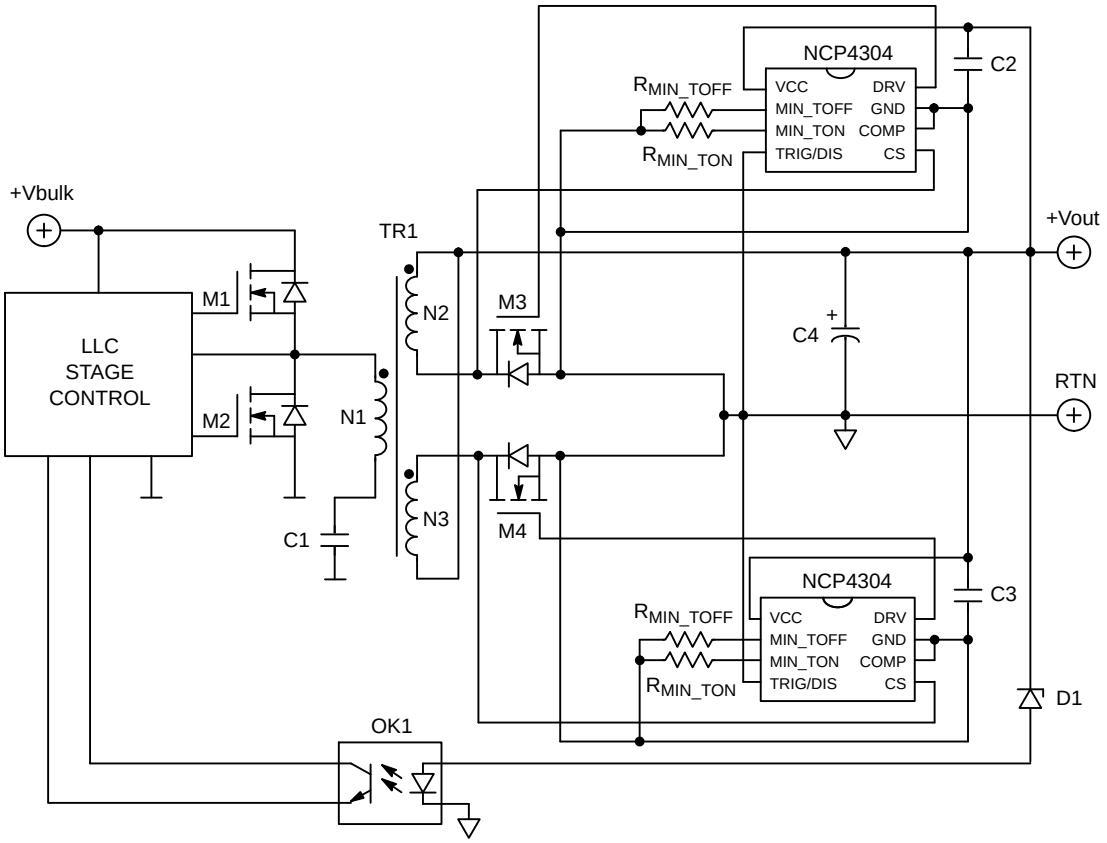

Figure 1. Typical Application Example – LLC Converter

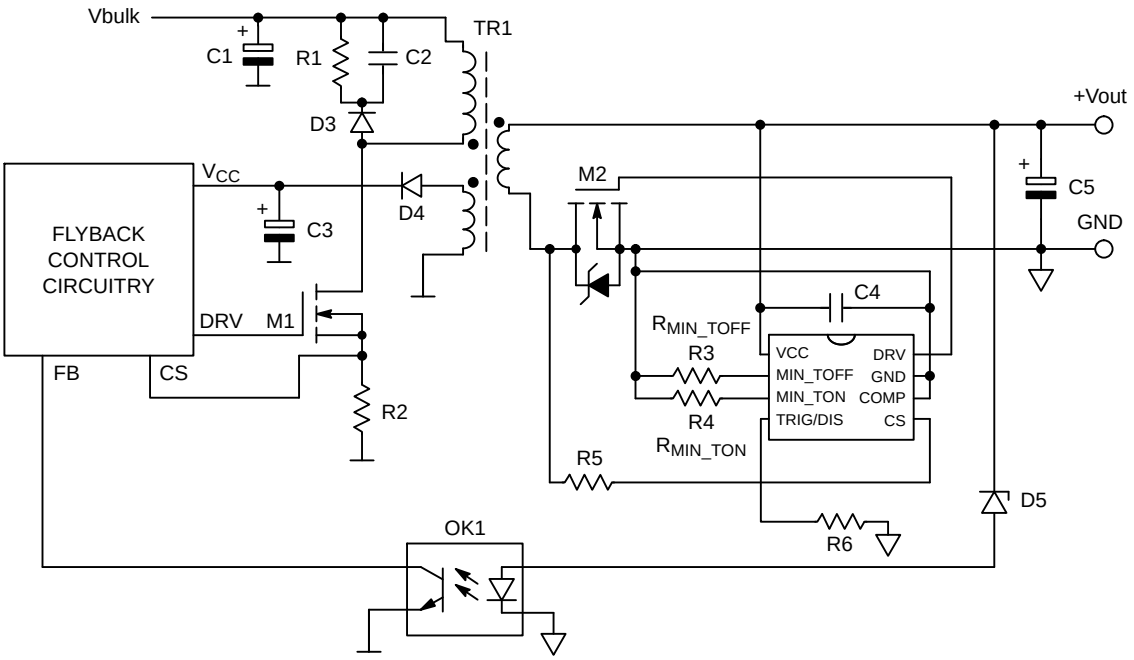

Figure 2. Typical Application Example − DCM or QR Flyback Converter

PIN FUNCTION DESCRIPTION

Pin No.	Pin Name	Function	Pin Description
1	VCC	Supplies the driver	Supply terminal of the controller. Accepts up to 30 V continuously.
2	MIN_TOFF	Minimum off time adjust	Adjust the minimum off time period by connecting resistor to ground.
3	MIN_TON	Minimum on time adjust	Adjust the minimum on time period by connecting resistor to ground.
4	TRIG/DIS	Forced reset input	This ultrafast input turns off the SR MOSFET in CCM applications. Activates sleep mode if pulled up for more than 100 μs.
5	CS	Current sense of the SR MOSFET	This pin detects if the current flows through the SR MOSFET and/or its body diode. Basic turn off detection threshold is 0 mV. A resistor in series with this pin can modify the turn off threshold if needed.
6	COMP	Compensation inductance connection	Use as a Kelvin connection to auxiliary compensation inductance. If SR MOSFET package parasitic inductance compensation is not used (like for SMT MOSFETs), connect this pin directly to GND pin.
7	GND	IC ground	Ground connection for the SR MOSFET driver and V_{CC} decoupling capacitor. Ground connection for minimum ton, toff adjust resistors and trigger input. GND pin should be wired directly to the SR MOSFET source terminal/soldering point using Kelvin connection.
8	DRV	Gate driver output	Driver output for the SR MOSFET.

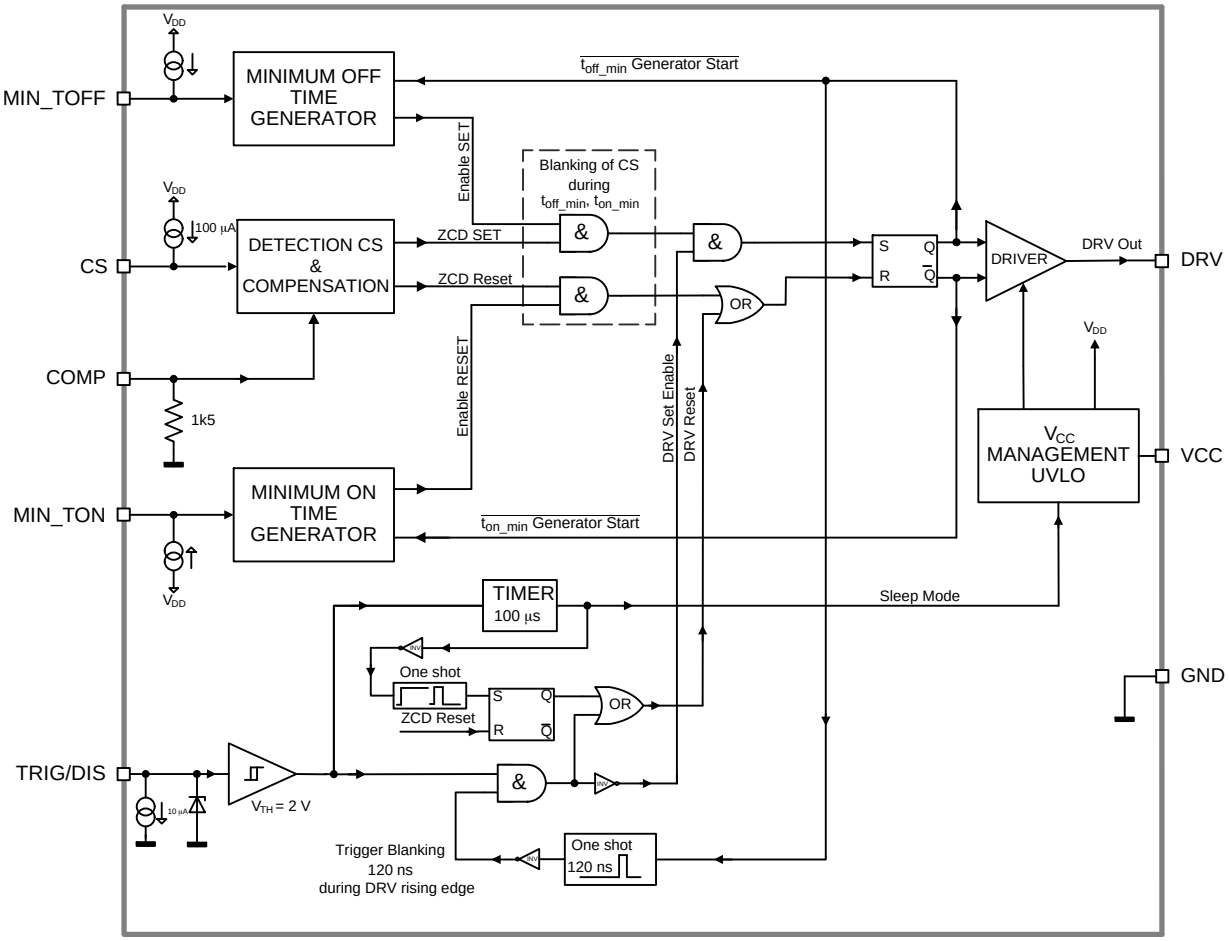

Figure 3. Internal Circuit Architecture

MAXIMUM RATINGS

Symbol	Rating	Value	Unit
V_{CC}	IC Supply Voltage	−0.3 to 30	V
V_{DRV}	Driver Output Voltage	−0.3 to 17	V
V_{CS}	Current Sense Input dc Voltage	−4 to 200	V
V_{Csdyn}	Current Sense Input Dynamic Voltage (t_{pw} = 200 ns)	−10 to 200	V
$V_{TRIG/DIS}$	Trigger Input Voltage	−0.3 to 10	V
V_{MIN_TON}, V_{MIN_TOFF}	MIN_TON and MIN_TOFF Input Voltage	−0.3 to 10	V
I_{MIN_TON}, I_{MIN_TOFF}	MIN_TON and MIN_TOFF Current	−10 to +10	mA
V_{COMP}	Static Voltage Difference between COMP and GND Pins (Internally Clamped)	−3 to 10	V
V_{COMP_dyn}	Dynamic Voltage Difference between COMP and GND Pins (t_{pw} = 200 ns)	−10 to 10	V
I_{COMP}	Current into COMP Pin	−5 to 5	mA
$R_{\theta JA}$	Thermal Resistance Junction-to-Air, SOIC − A/B Versions	180	°C/W
$R_{\theta JA}$	Thermal Resistance Junction-to-Air, DFN − A/B Versions, 50 mm^2 − 1.0 oz. Copper Spreader	180	°C/W
$R_{\theta JA}$	Thermal Resistance Junction-to-Air, DFN − A/B Versions, 600 mm^2 − 1.0 oz. Copper Spreader	80	°C/W
T_{Jmax}	Maximum Junction Temperature	150	°C
T_{Smax}	Storage Temperature Range	−60 to +150	°C
T_{Lmax}	Lead Temperature (Soldering, 10 s)	300	°C
	ESD Capability, Human Body Model except Pin V_{CS} – Pin 5, HBM ESD Capability on Pin 5 is 650 V per JEDEC Standard JESD22−A114E	2	kV
	ESD Capability, Machine Model per JEDEC Standard JESD22−A115−A	200	V

Stresses exceeding those listed in the Maximum Ratings table may damage the device. If any of these limits are exceeded, device functionality should not be assumed, damage may occur and reliability may be affected.

1. This device meets latchup tests defined by JEDEC Standard JESD78.

ELECTRICAL CHARACTERISTICS

(For typical values T_J = 25°C, for min/max values T_J = −40°C to +125°C, V_{CC} = 12 V, C_{DRV} = 0 nF, R_{MIN_TON} = R_{MIN_TOFF} = 10 kΩ, $V_{TRIG/DIS}$ = 0 V, f_{CS} = 100 kHz, DC_{CS} = 50%, V_{CS_high} = 4 V, V_{CS_low} = −1 V unless otherwise noted)

Symbol	Rating	Pin	Min	Typ	Max	Unit
SUPPLY SECTION						
V_{CC_on}	Turn-on threshold level (V_{CC} going up)	1	9.3	9.9	10.5	V
V_{CC_off}	Minimum operating voltage after turn-on (V_{CC} going down)	1	8.3	8.9	9.5	V
V_{CC_hyste}	V_{CC} hysteresis	1	0.6	1.0	1.4	V
I_{CC1_A} I_{CC1_B}	Internal IC consumption (no output load on pin 8, f_{SW} = 500 kHz, t_{on_min} = 500 ns, t_{off_min} = 620 ns)	1	− −	4.5 4.0	6.6 6.2	mA
I_{CC2_A} I_{CC2_B}	Internal IC consumption (C_{DRV} = 1 nF on pin 8, f_{SW} = 400 kHz, t_{on_min} = 500 ns, t_{off_min} = 620 ns)	1	− −	9.0 6.5	12 9	mA
I_{CC3_A} I_{CC3_B}	Internal IC consumption (C_{DRV} = 10 nF on pin 8, f_{SW} = 400 kHz, t_{on_min} = 500 ns, t_{off_min} = 620 ns)	1	− −	57.0 35.0	80 65	mA
$I_{CC_StartUp}$	Startup current consumption (V_{CC} = V_{CC_on} − 0.1 V, no switching at CS pin)	1	−	35	75	μA
$I_{CC_Disable_1}$	Current consumption during disable mode (No switching at CS pin, $V_{TRIG/DIS}$ = 5 V)	1	−	45	90	μA
$I_{CC_Disable_2}$	Current consumption during disable mode (CS pin is switching, f_{SW} = 500 kHz, V_{CS_high} = 4 V, V_{CS_low} =−1 V, $V_{TRIG/DIS}$ = 5 V)	1	−	200	330	μA
DRIVE OUTPUT						
t_{r_A}	Output voltage rise-time for A version (C_{DRV} = 10 nF)	8	−	120	−	ns
t_{r_B}	Output voltage rise-time for B version (C_{DRV} = 10 nF)	8	−	80	−	ns
t_{f_A}	Output voltage fall-time for A version (C_{DRV} = 10 nF)	8	−	50	−	ns
t_{f_B}	Output voltage fall-time for B version (C_{DRV} = 10 nF)	8	−	35	−	ns
R_{oh}	Driver source resistance (Note 1)	8	−	1.8	7	Ω
R_{ol}	Driver sink resistance	8	−	1	2	Ω

ELECTRICAL CHARACTERISTICS (continued)
(For typical values T_J = 25°C, for min/max values T_J = −40°C to +125°C, V_{CC} = 12 V, C_{DRV} = 0 nF, R_{MIN_TON} = R_{MIN_TOFF} = 10 kΩ, $V_{TRIG/DIS}$ = 0 V, f_{CS} = 100 kHz, DC_{CS} = 50%, V_{CS_high} = 4 V, V_{CS_low} = −1 V unless otherwise noted)

Symbol	Rating	Pin	Min	Typ	Max	Unit
DRIVE OUTPUT						
$I_{DRV_pk(source)}$	Output source peak current	8	–	2.5	–	A
$I_{DRV_pk(sink)}$	Output sink peak current	8	–	5	–	A
$V_{DRV(min_A)}$	Minimum drive output voltage for A version (V_{CC} = V_{CC_off} + 200 mV)	8	8.3	–	–	V
$V_{DRV(min_B)}$	Minimum drive output voltage for B version (V_{CC} = V_{CC_off} + 200 mV)	8	4.5	–	–	V
$V_{DRV(CLMP_A)}$	Driver clamp voltage for A version (12 < V_{CC} < 28, C_{DRV} = 1 nF)	8	10	12	14.3	V
$V_{DRV(CLMP_B)}$	Driver clamp voltage for B version (12 < V_{CC} < 28, C_{DRV} = 1 nF)	8	5	6	8	V
CS INPUT						
t_{pd_on}	The total propagation delay from CS input to DRV output turn on (V_{CS} goes down from 4 V to −1 V, t_{f_CS} = 5 ns, COMP pin connected to GND)	5, 8	–	60	90	ns
t_{pd_off}	The total propagation delay from CS input to DRV output turn off (V_{CS} goes up from −1 V to 4 V, t_{r_CS} = 5 ns, COMP pin connected to GND), (Note 1)	5, 8	–	40	55	ns
I_{shift_CS}	Current sense input current source (V_{CS} = 0 V)	5	95	100	105	μA
$V_{th_cs_on}$	Current sense pin turn-on input threshold voltage	5, 8	−120	−85	−50	mV
$V_{th_cs_off}$	Current sense pin turn-off threshold voltage, COMP pin connected to GND (Note 1)	5, 8	−1	–	0	mV
G_{comp}	Compensation inverter gain	5,6,8		−1		–
$I_{CS_Leakage}$	Current Sense input leakage current, V_{CS} = 200 V	5	–	–	1	μA
TRIGGER/DISABLE INPUT						
t_{TRIG/DIS_pw_min}	Minimum trigger pulse width (Note 1)	4	30	–	–	ns
$V_{TRIG/DIS}$	Trigger input threshold voltage ($V_{TRIG/DIS}$ goes up)	4	1.5	–	2.5	V
$t_{p_TRIG/DIS}$	Propagation delay from trigger input to the DRV output ($V_{TRIG/DIS}$ goes up from 0 to 5 V, $t_{r_TRIG/DIS}$ = 5 ns)	4	–	13	30	ns
t_{TRIG/DIS_light_load}	Light load turn off filter duration	4	70	100	130	μs
$t_{TRIG/DIS_light_load_rec.}$	IC operation recovery time when leaving light load disable mode ($V_{TRIG/DIS}$ goes down from 5 to 0 V, $t_{f_TRIG/DIS}$ = 5 ns)	4	–	–	10	μs
t_{TRIG/DIS_blank}	Blanking time of trigger during DRV rising edge (V_{CS} < $V_{th_cs_on}$, single pulse on trigger t_{TRIG/DIS_pw} = 50 ns)	4	–	120	–	ns
$I_{TRIG/DIS}$	Trigger input pull down current ($V_{TRIG/DIS}$ = 5 V)	4	–	10	–	μA
t_{on_min} AND t_{off_min} ADJUST						
t_{on_min}	Minimum t_{on} period (R_{MIN_TON} = 0 Ω)	3	–	130	–	ns
t_{off_min}	Minimum t_{off} period (R_{MIN_TOFF} = 0 Ω)	2	560	600	690	ns
t_{on_min}	Minimum t_{on} period (R_{MIN_TON} = 10 kΩ)	3	0.9	1.0	1.1	μs
t_{off_min}	Minimum t_{off} period (R_{MIN_TOFF} = 10 kΩ)	2	0.9	1.0	1.1	μs
t_{on_min}	Minimum t_{on} period (R_{MIN_TON} = 50 kΩ)	3	–	4.8	–	μs
t_{off_min}	Minimum t_{off} period (R_{MIN_TOFF} = 50 kΩ)	2	–	4.8	–	μs
t_{on_min}	Minimum t_{on} period (R_{MIN_TON} = 100 kΩ) (Note 2)	3	8.64	9.6	10.56	μs
t_{off_min}	Minimum t_{off} period (R_{MIN_TOFF} = 100 kΩ) (Note 2)	2	8.55	9.5	10.45	μs

Product parametric performance is indicated in the Electrical Characteristics for the listed test conditions, unless otherwise noted. Product performance may not be indicated by the Electrical Characteristics if operated under different conditions.

1. Guaranteed by design.
2. Guaranteed by design and verified by characterization, see Figure 4. t_{on_min} on R_{MIN_TON} dependency.

TYPICAL CHARACTERISTICS

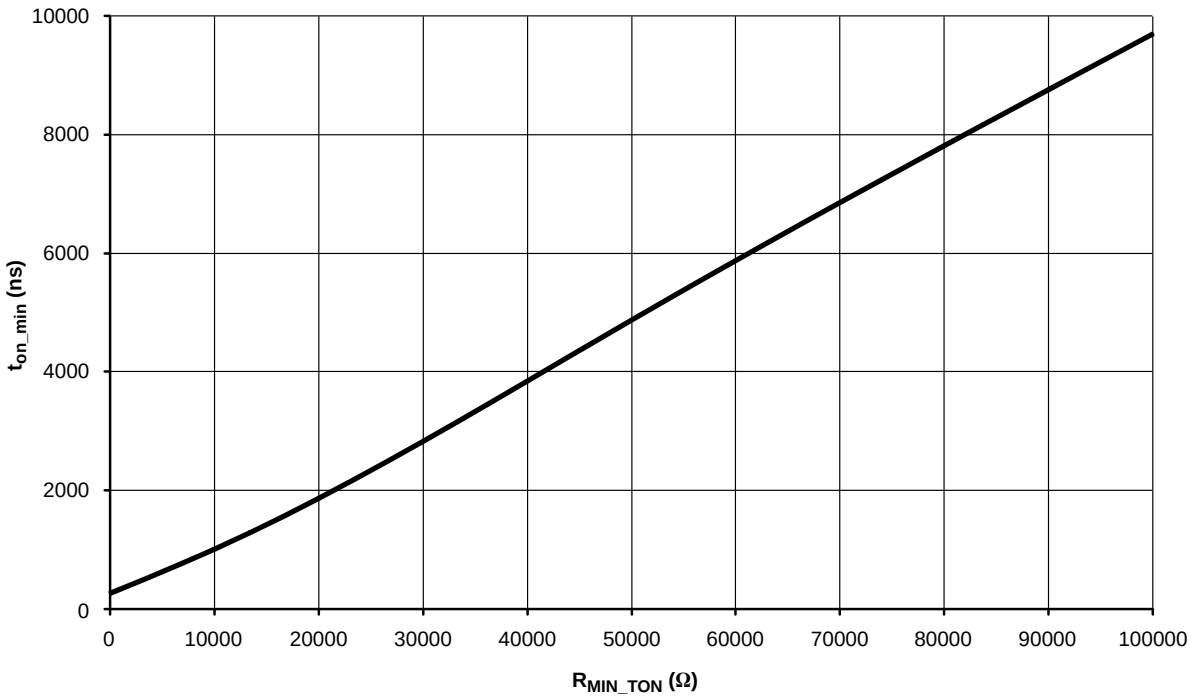

Figure 4. t_{on_min} on R_{MIN_TON} Dependency

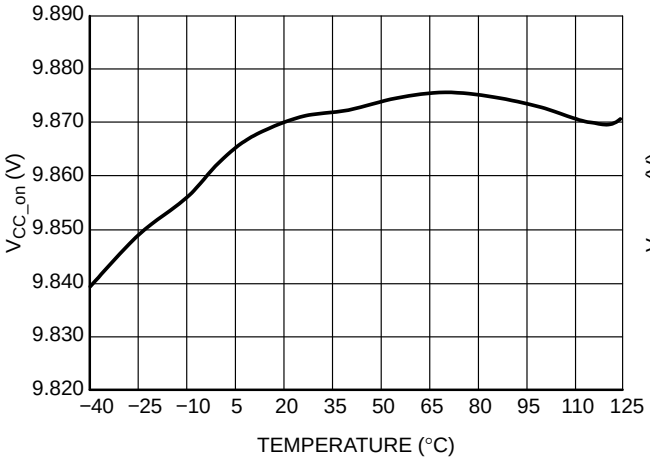

Figure 5. VCC Startup Voltage

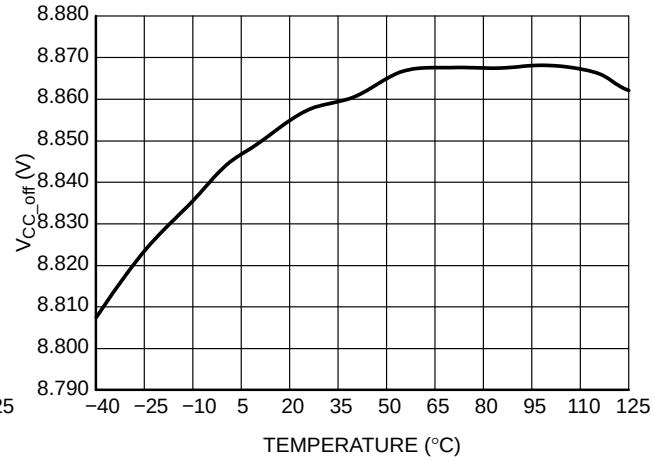

Figure 6. VCC Turn-off Voltage

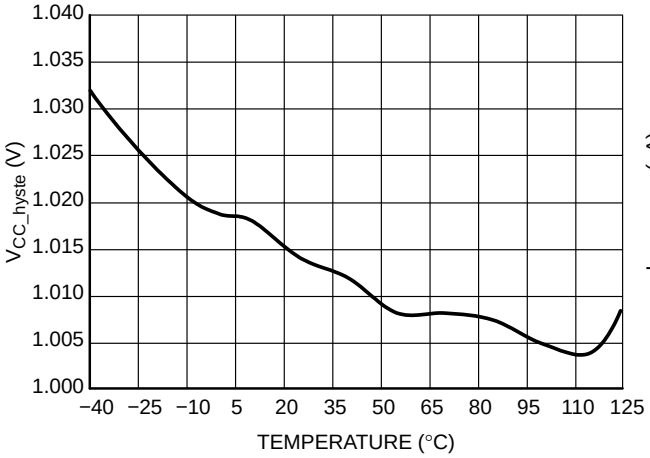

Figure 7. VCC Hysteresis

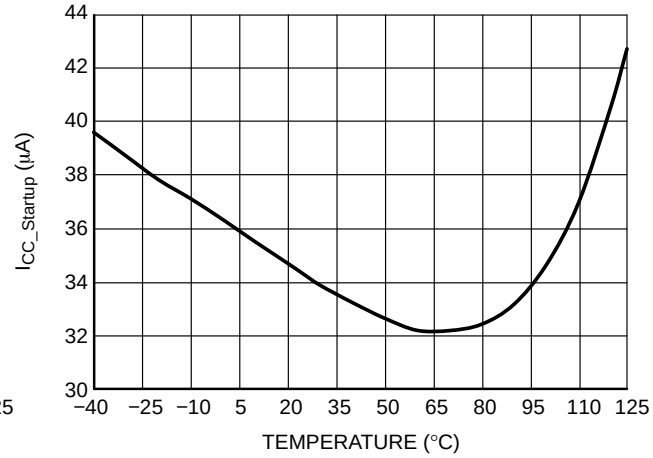

Figure 8. Startup Current

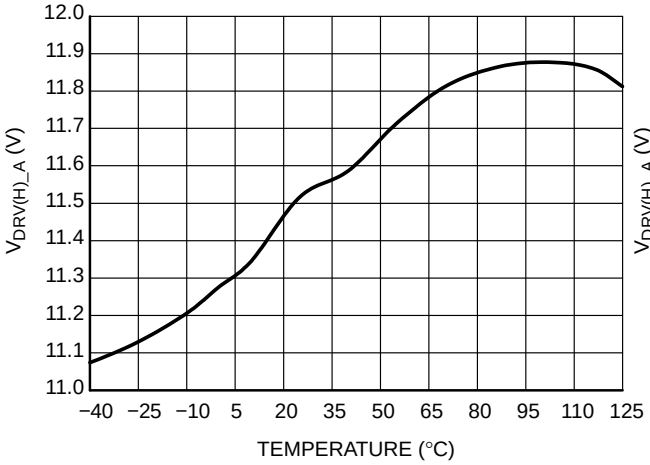

Figure 9. Driver High Level – A Version, V_{CC} = 12 V and C_{DRV} = 1 nF

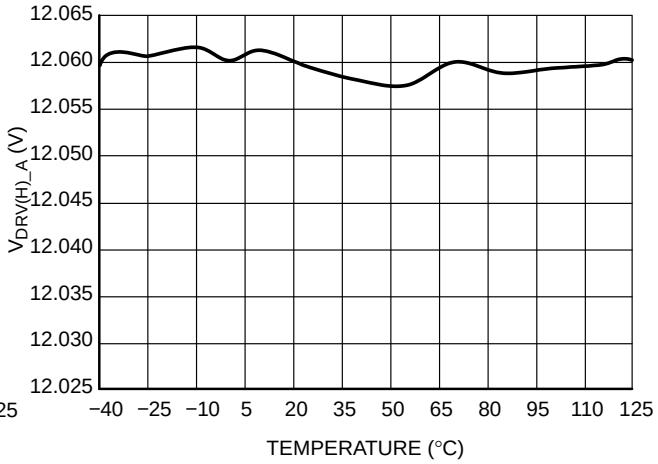

Figure 10. Driver High Level – A Version, V_{CC} = 12 V and C_{DRV} = 10 nF

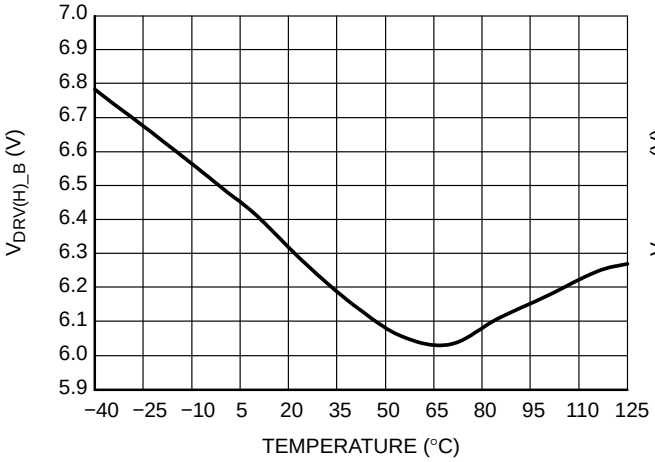

Figure 11. Driver High Level – B Version, V_{CC} = 12 V and C_{DRV} = 1 nF

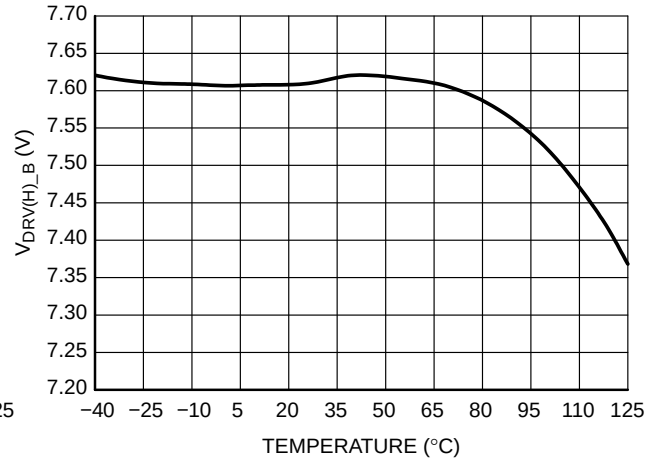

Figure 12. Driver High Level – B Version, V_{CC} = 12 V and C_{DRV} = 10 nF

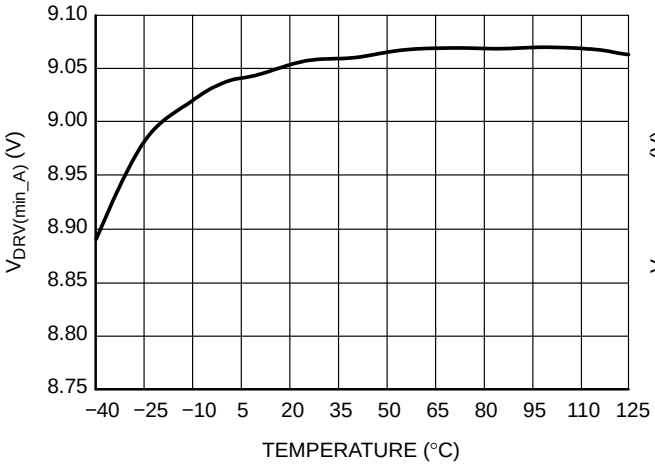

Figure 13. Minimal Driver High Level − A Version, V_{CC_off} + 0.2 V and C_{DRV} = 0 nF

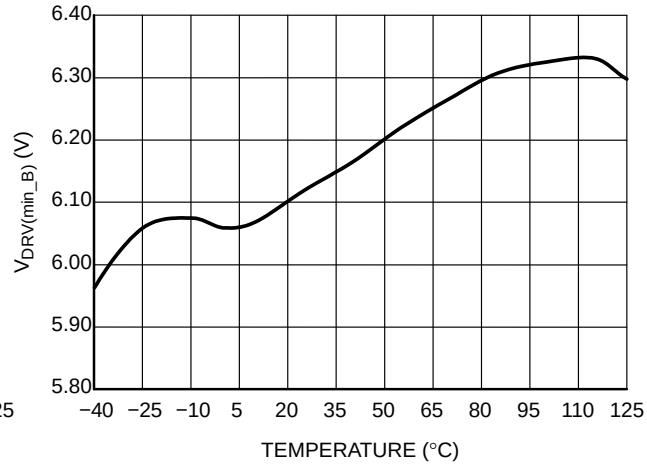

Figure 14. Minimal Driver High Level − B Version, V_{CC_off} + 0.2 V and C_{DRV} = 0 nF

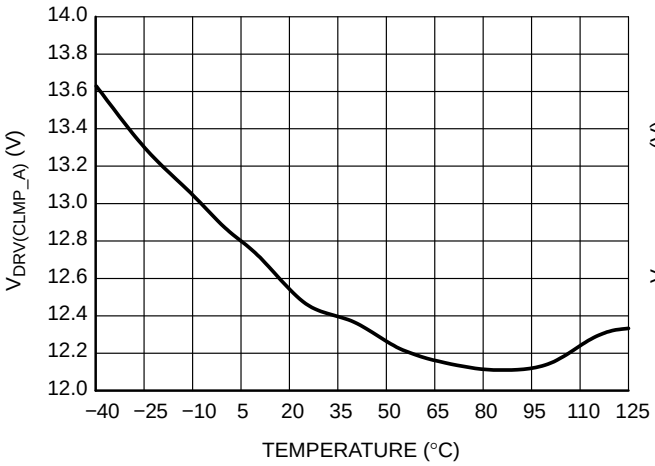

Figure 15. Driver Clamp Level − A Version, V_{CC} = 28 V and C_{DRV} = 1 nF

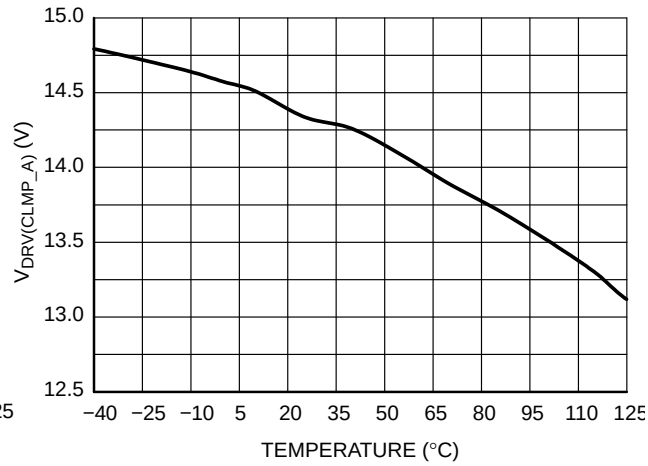

Figure 16. Driver Clamp Level − A Version, V_{CC} = 28 V and C_{DRV} = 10 nF

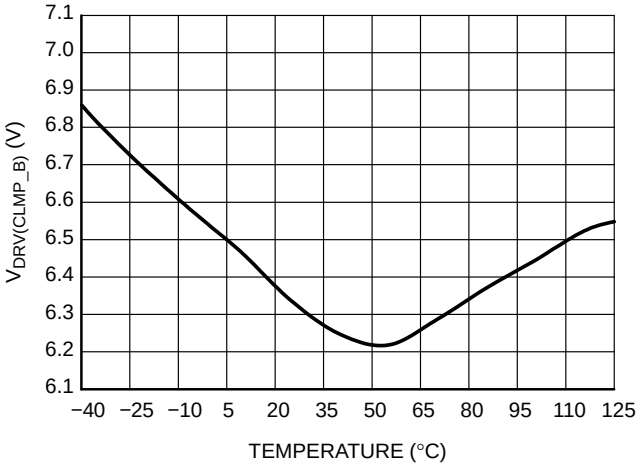

Figure 17. Driver Clamp Level − B Version, V_{CC} = 28 V and C_{DRV} = 1 nF

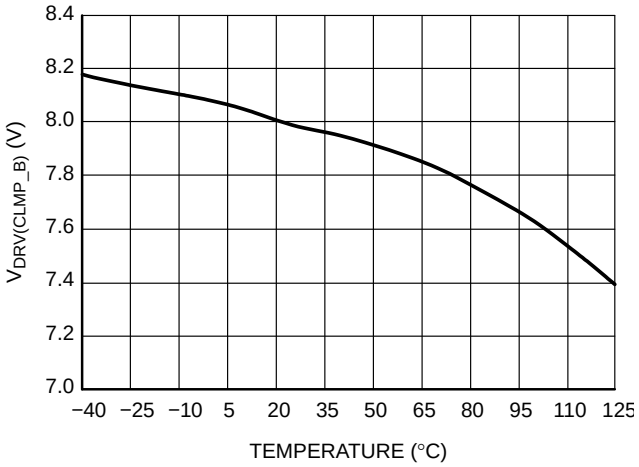

Figure 18. Driver Clamp Level − B Version, V_{CC} = 28 V and C_{DRV} = 10 nF

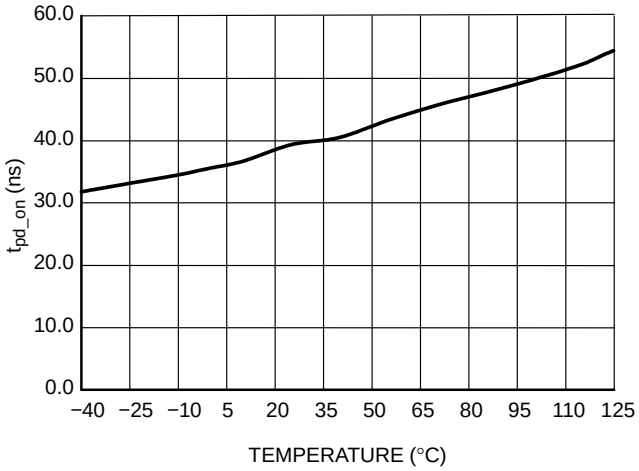

Figure 19. CS to DRV Turn-on Propagation Delay

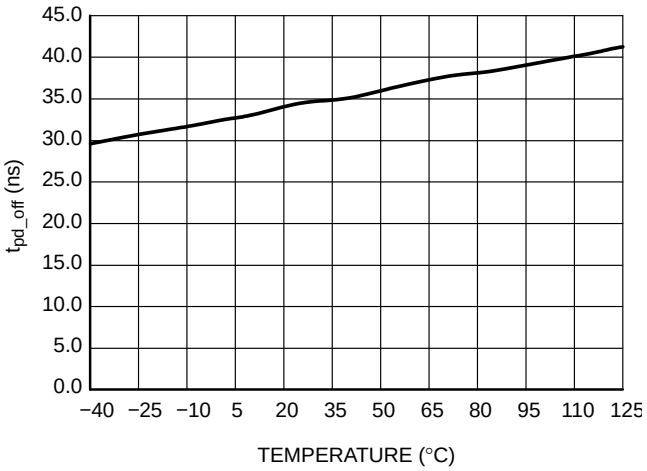

Figure 20. CS to DRV Turn-off Propagation Delay

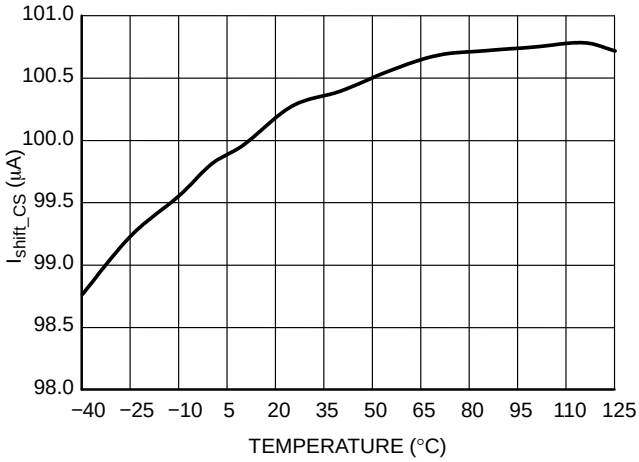

Figure 21. CS Pin Shift Current

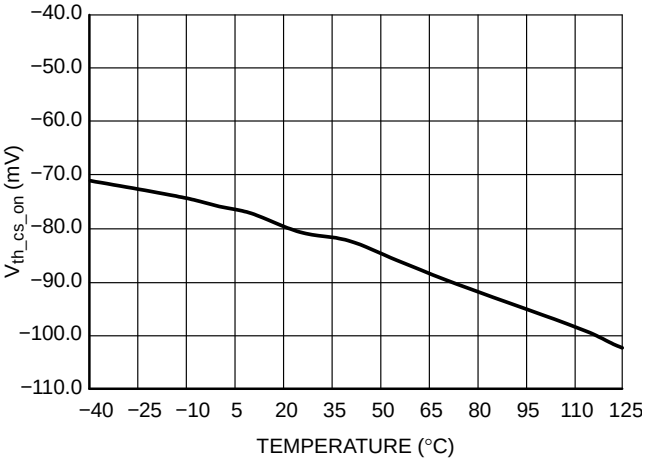

Figure 22. CS Turn-on Threshold

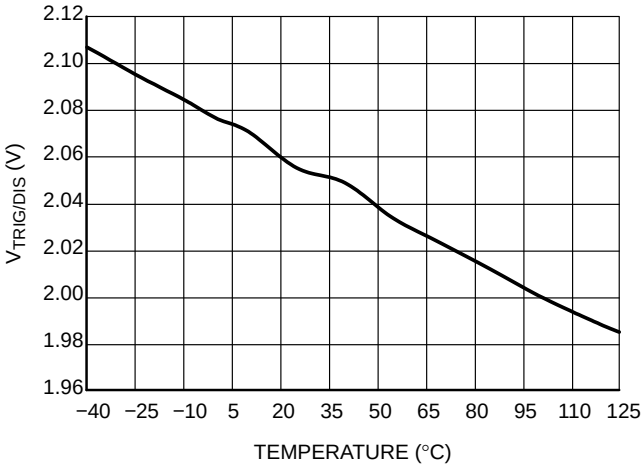

Figure 23. Trigger Input Threshold Voltage

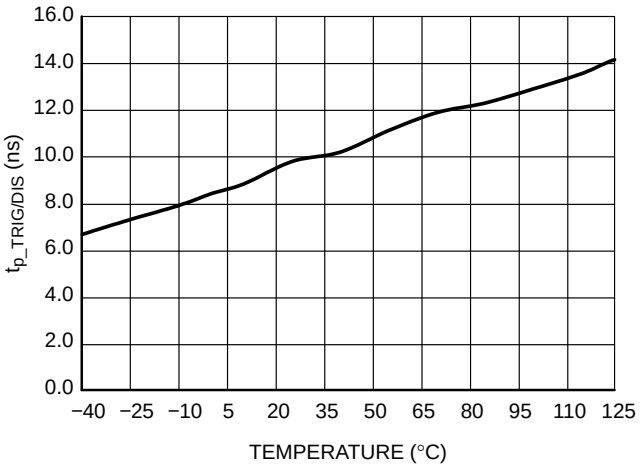

Figure 24. Propagation Delay from Trigger Input to DRV Turn-off

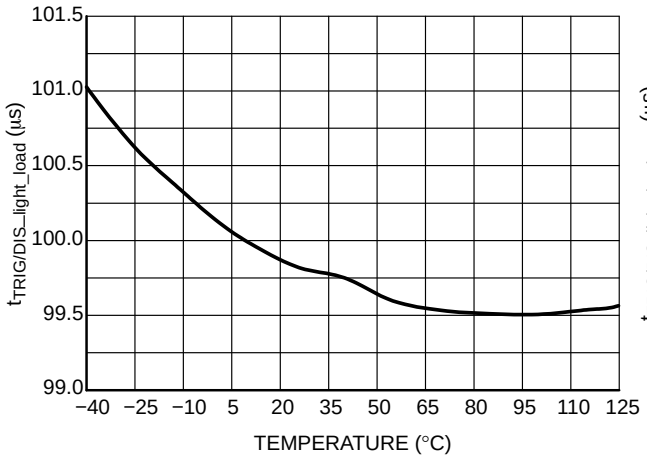

Figure 25. Light Load Transition Timer Duration

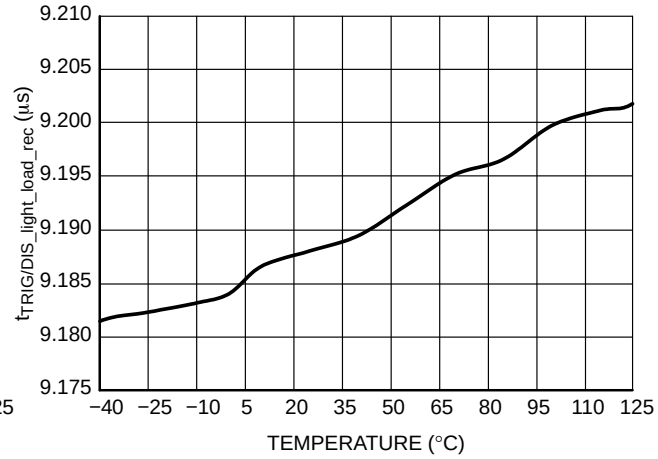

Figure 26. Light Load to Normal Operation Recovery Time

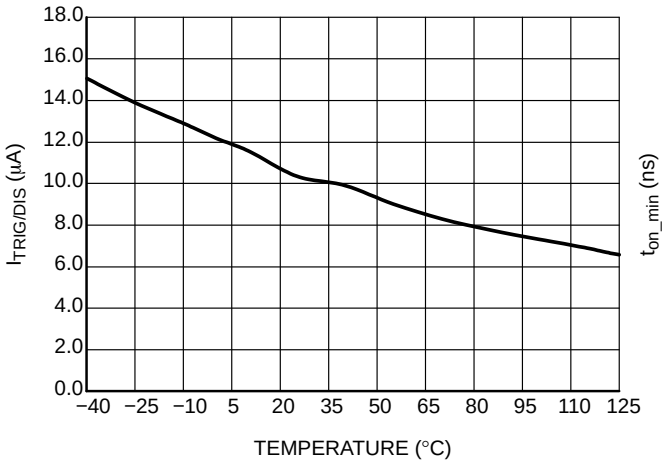

Figure 27. Trigger Input Pulldown Current

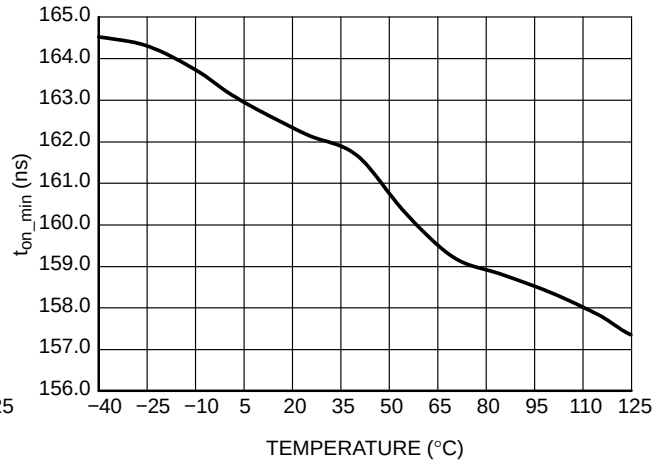

Figure 28. Minimum on Time @ R_{MIN_TON} = 0 Ω

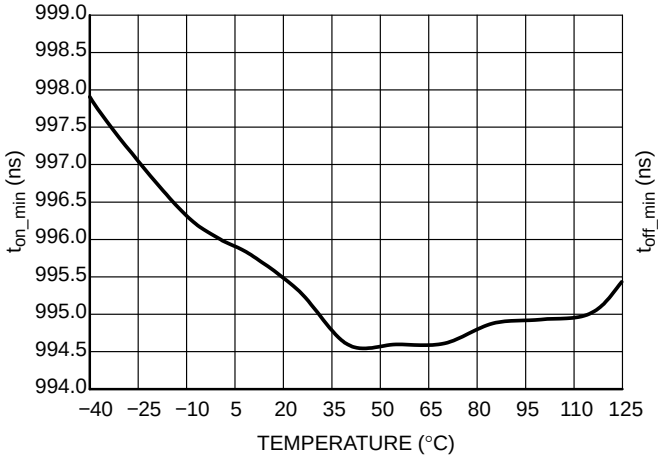

Figure 29. Minimum On Time @ R_{MIN_TON} = 10 kΩ

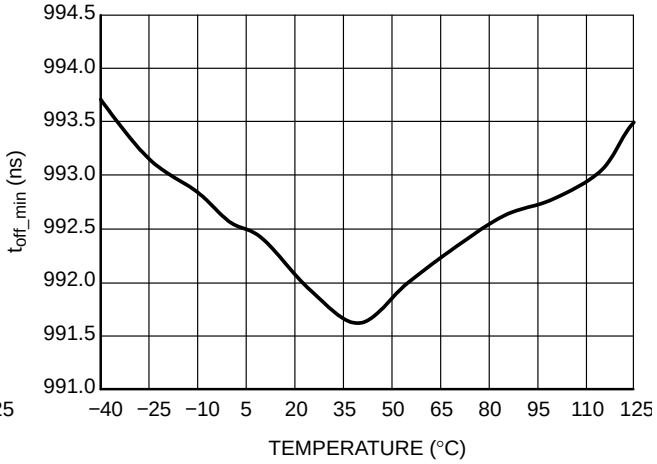

Figure 30. Minimum Off Time @ R_{MIN_TOFF} = 10 kΩ

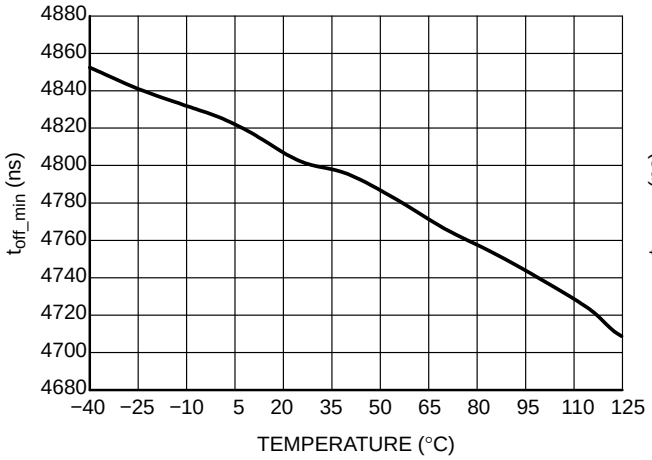

Figure 31. Minimum Off Time @ R_{MIN_TOFF} = 50 kΩ

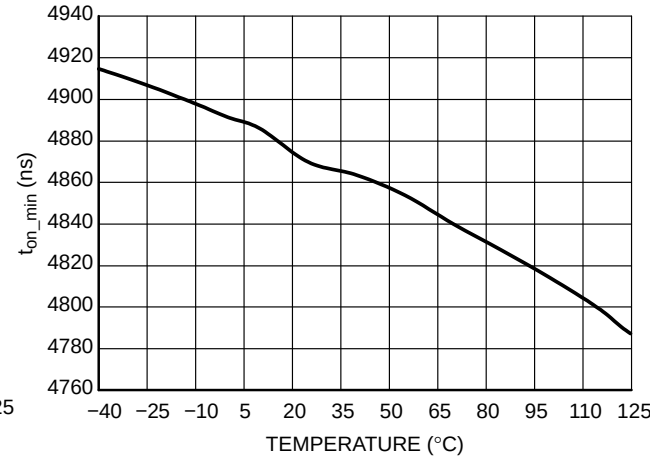

Figure 32. Minimum On Time @ R_{MIN_TON} = 50 kΩ

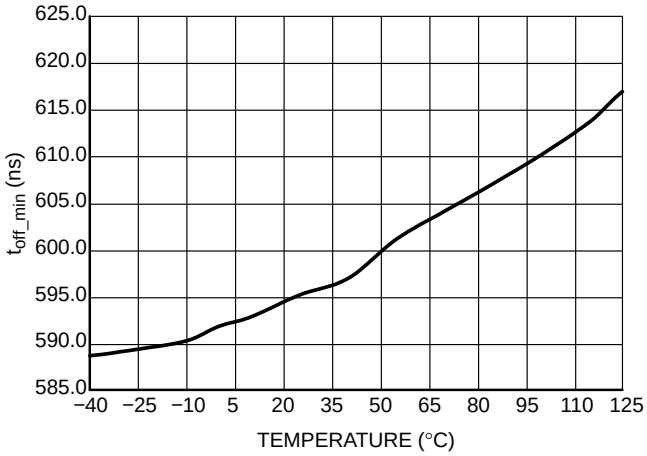

Figure 33. Minimum Off Time @ R_{MIN_TOFF} = 0 Ω

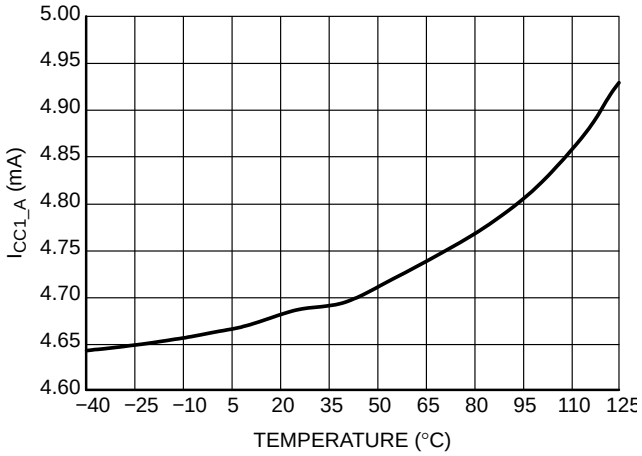

Figure 34. Internal IC Consumption (A Version, No Load on Pin 8, f_{SW} = 500 kHz, t_{on_min} = 500 ns, t_{off_min} = 620 ns)

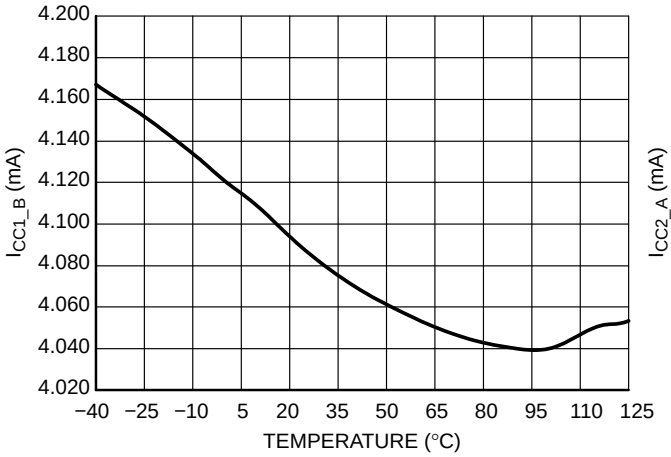

Figure 35. Internal IC Consumption (B version, C_{DRV} = 0 nF, f_{SW} = 500 kHz, t_{on_min} = 500 ns, t_{off_min} = 620 ns)

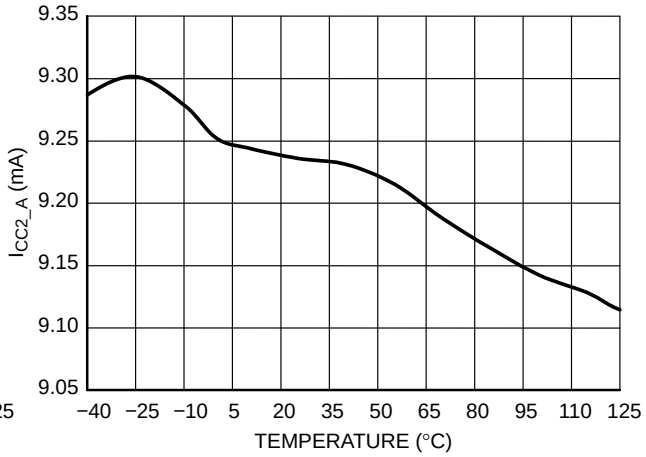

Figure 36. Internal IC Consumption (A Version, C_{DRV} = 1 nF, f_{SW} = 400 kHz, t_{on_min} = 500 ns, t_{off_min} = 620 ns)

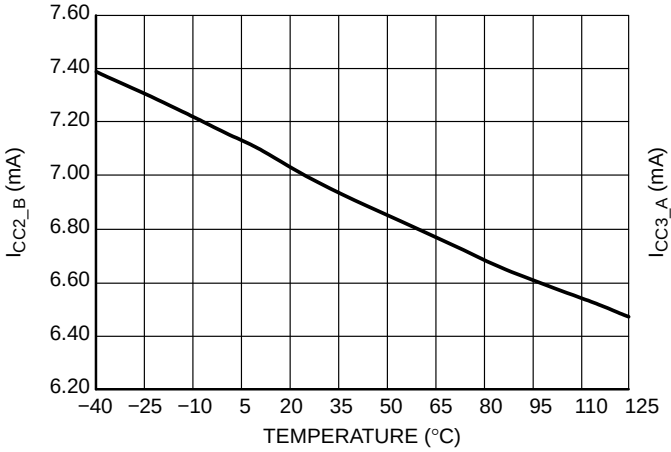

Figure 37. Internal IC Consumption (B Version, C_{DRV} = 1 nF, f_{SW} = 400 kHz, t_{on_min} = 500 ns, t_{off_min} = 620 ns)

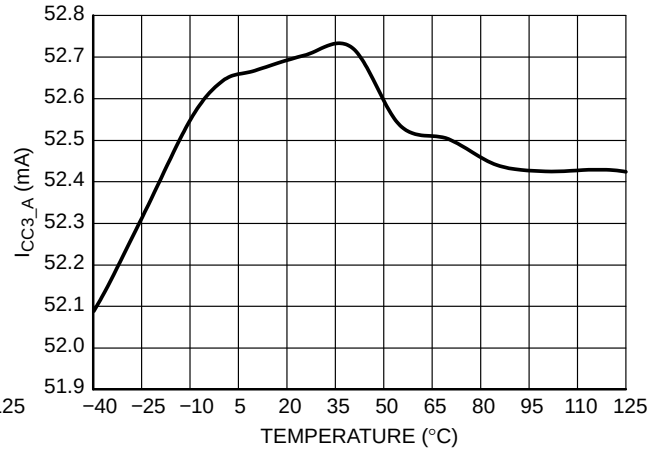

Figure 38. Internal IC Consumption (A Version, C_{DRV} = 10 nF, f_{SW} = 400 kHz, t_{on_min} = 500 ns, t_{off_min} = 620 ns)

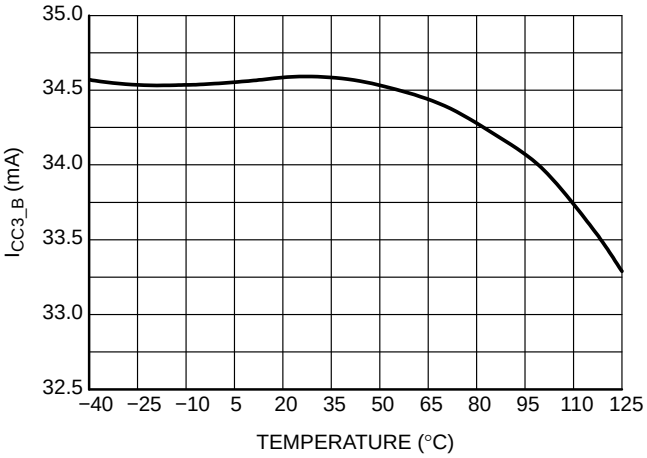

Figure 39. Internal IC Consumption (B Version, C_{DRV} = 10 nF, f_{SW} = 400 kHz, t_{on_min} = 500 ns, t_{off_min} = 620 ns)

APPLICATION INFORMATION

General Description

The NCP4304A/B is designed to operate either as a standalone IC or as a companion IC to a primary side controller to help achieve efficient synchronous rectification in switch mode power supplies. This controller features a high current gate driver along with high-speed logic circuitry to provide appropriately timed drive signals to a synchronous rectification MOSFET. With its novel architecture, the NCP4304A/B has enough versatility to keep the synchronous rectification efficient under any operating mode.

The NCP4304A/B works from an available bias supply with voltage range from 10.4 V to 28 V (typical). The wide V_{CC} range allows direct connection to the SMPS output voltage of most adapters such as notebook and LCD TV adapters. As a result, the NCP4304A/B simplifies circuit operation compared to other devices that require specific bias power supplies (e.g. 5 V). The high voltage capability of the V_{CC} is also a unique feature designed to allow operation for a broader range of applications.

Precise turn off threshold of the current sense comparator together with accurate offset current source allows the user to adjust for any required turn off current threshold of the SR MOSFET switch using a single resistor. Compared to other SR controllers that provide turn off thresholds in the range of −10 mV to −5 mV, the NCP4304A/B offers a turn off threshold of 0 mV that in combination with a low $R_{DS(on)}$ SR MOSFET significantly reduces the turn off current threshold and improves efficiency.

To overcome issues after turn on and off events, the NCP4304A/B provides adjustable minimum on time and off time blanking periods. Blanking times can be adjusted independently of IC V_{CC} using resistors connected to GND. If needed, blanking periods can be modulated using additional components.

An ultrafast trigger input helps to implement synchronous rectification systems in CCM applications (like CCM flyback or forward). The time delay from trigger input to driver turn off event is 10 ns (typicaly). Additionally, the trigger input can be used to disable the IC and activate a low consumption standby mode. This feature can be used to decrease standby consumption of an SMPS.

Finally, the NCP4304A/B features a special input that can be used to automatically compensate for SR MOSFET parasitic inductance effect. This technique achieves the maximum available on-time and thus optimizes efficiency when a MOSFET in standard package (like TO−220 or TO247) is used. If a SR MOSFET in SMT package with negligible inductance is used, the compensation input is connected to GND pin.

Zero Current Detection and Parasitic Inductance Compensation

Figure 40 shows the internal connection of the ZCD circuitry on the current sense input. The synchronous rectification MOSFET is depicted with it's parasitic inductances to demonstrate operation of the compensation system.

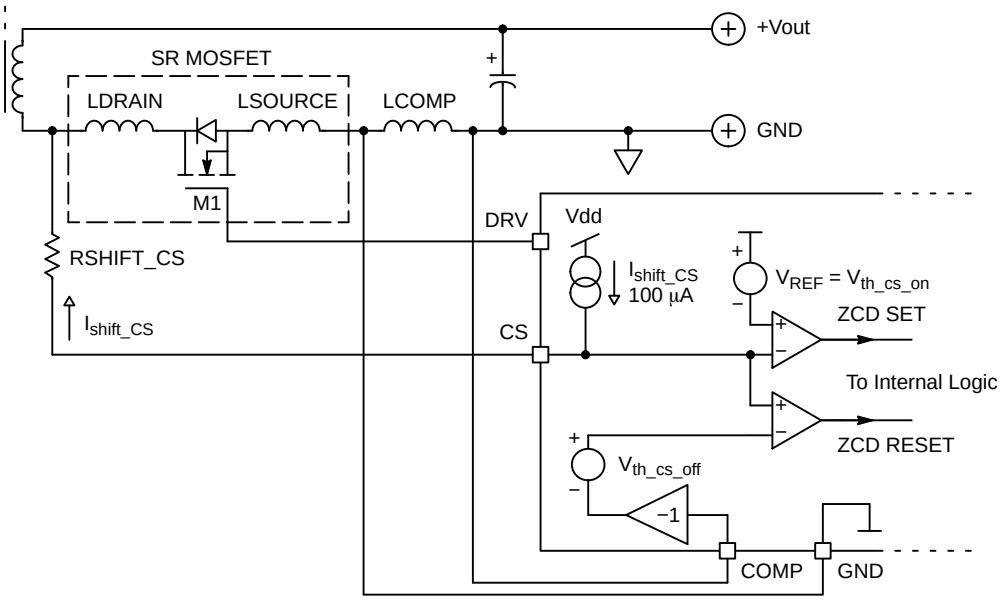

Figure 40. ZCD Sensing Circuitry Functionality

When the voltage on the secondary winding of the SMPS reverses, the body diode of M1 starts to conduct current and the voltage of M1's drain drops approximately to −1 V. The CS pin sources current of 100 μA that creates a voltage drop on the RSHIFT_CS resistor. Once the voltage on the CS pin is lower than $V_{th_cs_on}$ threshold, M1 is turned on. Because of parasitic impedances, significant ringing can occur in the application. To overcome sudden turn-off due to mentioned ringing, the minimum conduction time of the SR MOSFET is activated. Minimum conduction time can be adjusted using R_{MIN_TON} resistor.

The SR MOSFET is turned-off as soon as the voltage on the CS pin is higher than $V_{th_cs_off}$. For the same ringing reason, a minimum off time timer is asserted once the turn-off is detected. The minimum off time can be externally adjusted using R_{MIN_TOFF} resistor. MOSFET M1 conducts when the secondary current decreases, therefore the turn-off time depends on its $R_{DS(on)}$. The 0 mV threshold provides an optimum switching period usage while keeping enough time margin for the gate turn off. The RSHIFT_CS resistor provides the designer with the possibility to modify (increase) the actual turn-off current threshold.

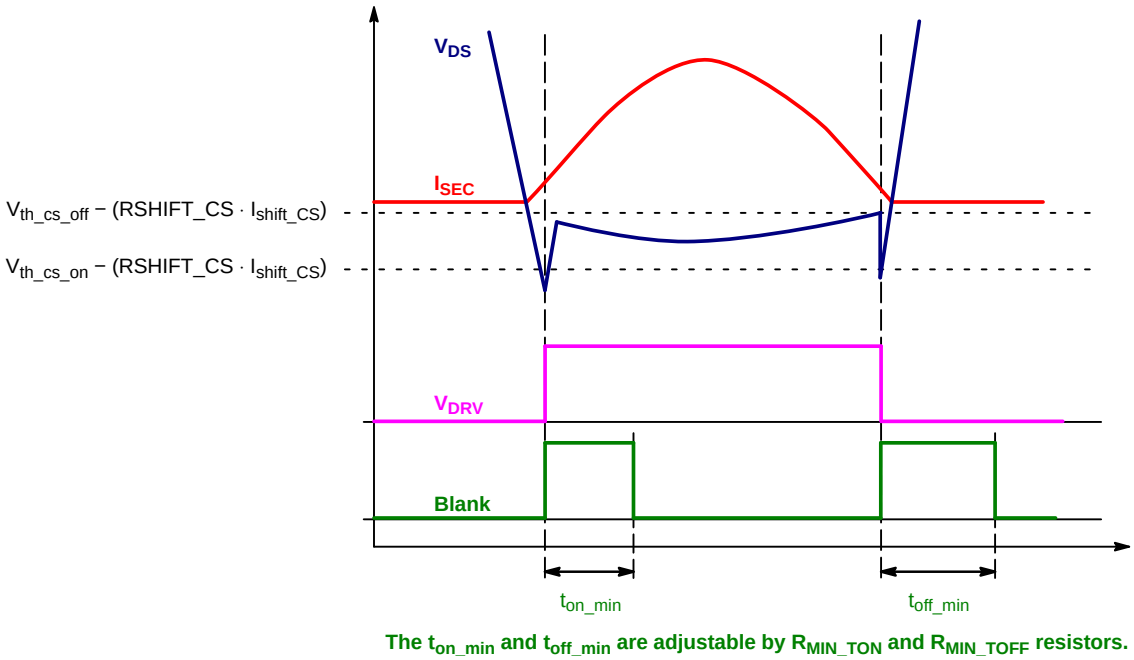

Figure 41. ZCD Comparators Thresholds and Blanking Periods Timing

If no RSHIFT_CS resistor is used, the turn-on and turn-off thresholds are fully given by the CS input specification (please refer to parametric table). Once non-zero RSHIFT_CS resistor is used, both thresholds move down (i.e. higher MOSFET turn off current) as the CS pin offset current causes a voltage drop that is equal to:

$$V_{RSHIFT_CS} = RSHIFT_CS \cdot I_{shift_CS} \quad \text{(eq. 1)}$$

Final turn-on and turn-off thresholds can be then calculated as:

$$V_{CS_turn_on} = V_{th_cs_on} - \left(RSHIFT_CS \cdot I_{shift_CS}\right) \quad \text{(eq. 2)}$$

$$V_{CS_turn_off} = V_{th_cs_off} - \left(RSHIFT_CS \cdot I_{shift_CS}\right) \quad \text{(eq. 3)}$$

Note that RSHIFT_CS impact on turn-on threshold is less critical compare to turn-off threshold.

If using a SR MOSFET in TO−220 package (or other package which features leads), the parasitic inductance of the package leads causes a turn-off current threshold increase. This is because current that flows through the SR MOSFET has quite high di(t)/dt that induces error voltage on the SR MOSFET leads inductance. This error voltage, that is proportional to the secondary current derivative, shifts the CS input voltage to zero when significant current still flows through the channel. Zero current threshold is thus detected when current still flows through the SR MOSFET channel – please refer to Figure 42 for better understanding. As a result, the SR MOSFET is turned-off prematurely and the efficiency of the SMPS is not optimized.

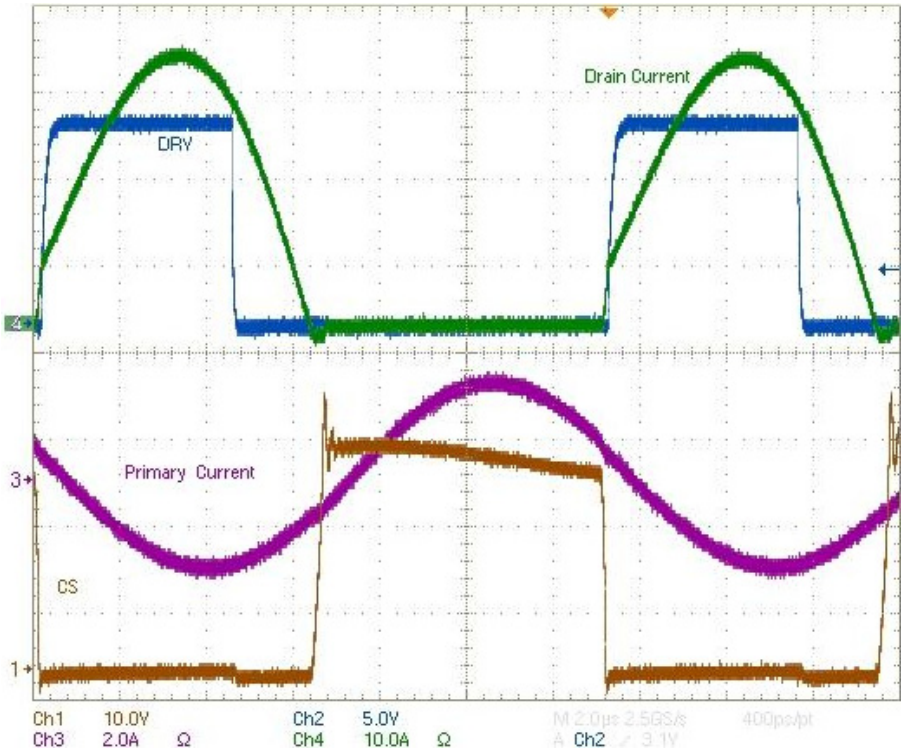

Figure 42. Waveforms from SR System Using MOSFET in TO−220 Package Without Parasitic Inductance Compensation – SR MOSFET Channel Conduction Time is Reduced

Note that the efficiency impact of the error caused by parasitic inductance increases with lower $R_{DS(on)}$ MOSFETs and/or higher operating frequency.

The NCP4304A/B offers a way to compensate for MOSFET parasitic inductances effect − refer to Figure 43.

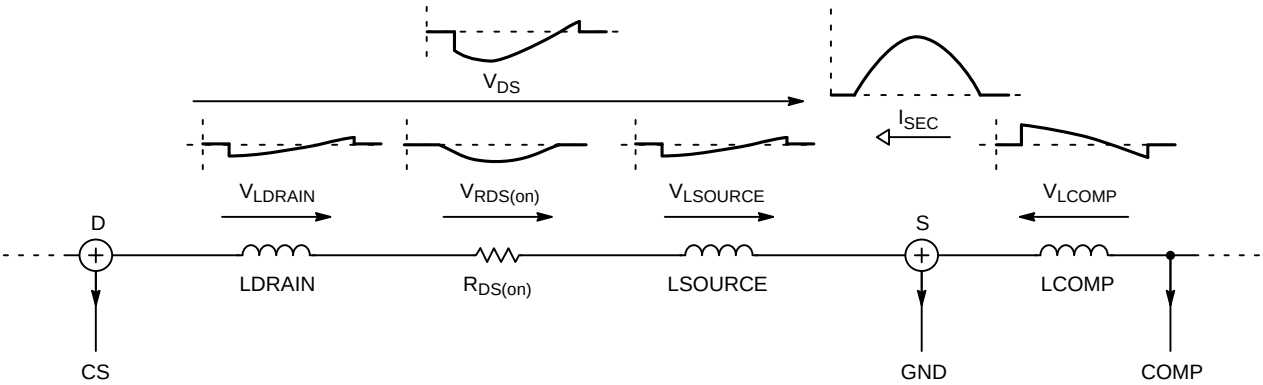

Figure 43. Package Parasitic Inductances Compensation Principle

Dedicated input (COMP) offers the possibility to use an external compensation inductance (wire strap or PCB). If the value of this compensation inductance is LCOMP = LDRAIN + LSOURCE, the compensation voltage created on this inductance is exactly the same as the sum of error voltages created on drain and source parasitic inductances i.e. $V_{LDRAIN} + V_{LSOURCE}$. The internal analog inverter (Figure 40) inverts compensation voltage V_{LCOMP} and offsets the current sense comparator turn-off threshold. The current sense comparator thus “sees” between its terminals a voltage that would be seen on the SR MOSFET channel resistance in case the lead inductances wouldn’t exist. The current sense comparator of the NCP4304A/B is thus able to detect the secondary current zero crossing very precisely. More over, the secondary current turn-off threshold is then di(t)/t independent thus the NCP4304A/B allows to increase operating frequency of the SR system. One should note that the parasitic resistance of compensation inductance should

be as low as possible compared to the SR MOSFET channel and leads resistance otherwise compensation is not efficient. Typical value of compensation inductance for a TO−220 package is 7 nH. Waveforms from the application with compensated SR system can be seen in Figure 44. One can see the conduction time has been significantly increased and turn-off current reduced.

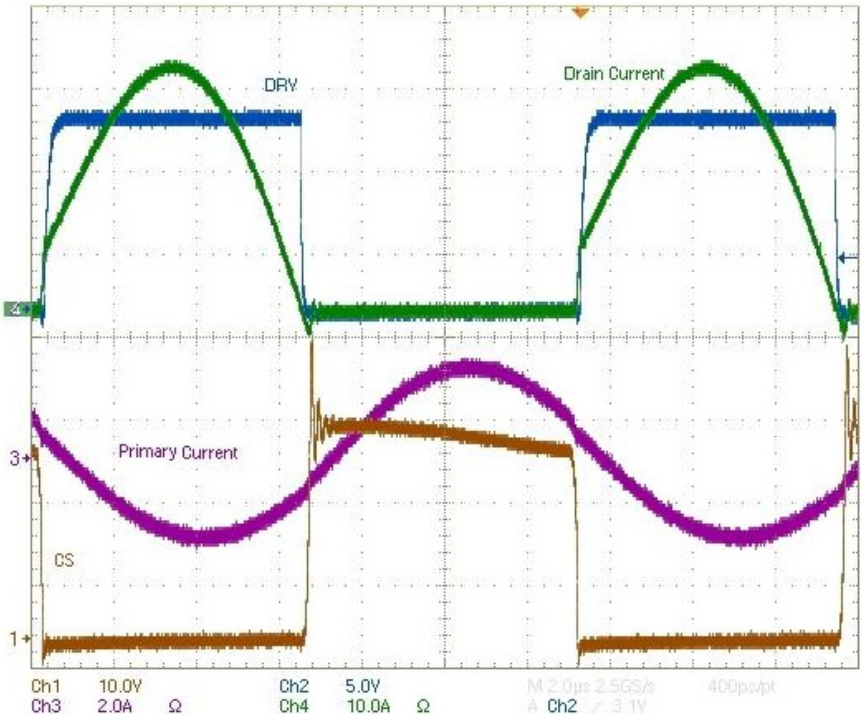

Figure 44. Waveforms SR System Using MOSFET in TO−220 Package with Parasitic Inductance Compensation – SR MOSFET Channel Conduction Time is Optimized

Note that using the compensation system is only beneficial in applications that are using a low $R_{DS(on)}$ MOSFET in non-SMT package. Using the compensation method allows for optimized efficiency with a standard TO−220 package that in turn results in reduced costs, as the SMT MOSFETs usually require reflow soldering process and more expensive PCB.

From the above paragraphs and parameter tables it is evident that turn-off threshold precision is quite critical. If we consider a SR MOSFET with $R_{DS(on)}$ of 1 mΩ, the 1 mV error voltage on the CS pin results in a 1 A turn-off current threshold difference. Thus the PCB layout is very critical when implementing the SR system. Note that the CS turn-off comparator as well as compensation inputs are referred to the GND pin. Any parasitic impedance (resistive or inductive − talking about mΩ and nH values) can cause a high error voltage that is then evaluated by the CS comparator. Ideally the CS turn-off comparator should detect voltage that is caused by secondary current directly on the SR MOSFET channel resistance. Practically this is not possible because of the bonding wires, leads and soldering. To assure the best efficiency results, a Kelvin connection of the SR controller to the power circuitry should be implemented (i.e. GND pin should be connected to the SR MOSFET source soldering point and current sense pin should be connected to the SR MOSFET drain soldering point). Any impact of PCB parasitic elements on the SR controller functionality is then avoided. Figures 45 and 46 show examples of SR system layouts using parasitic inductance compensation (i.e. for low $R_{DS(on)}$ MOSFET in TO−220 package) and not using compensation (i.e. for higher $R_{DS(on)}$ MOSFET in TO−220 package or SMT package MOSFETs).

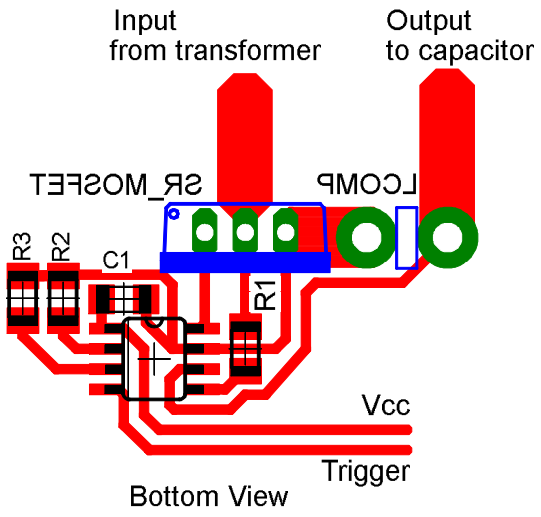

Figure 45. Recommended Layout When Parasitic Inductance Compensation is Used

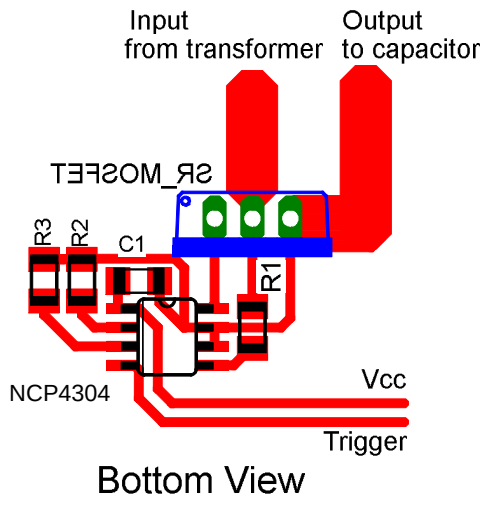

Figure 46. Recommended Layout When Parasitic Inductance Compensation is Not Used

Trigger/Disable Input

The NCP4304A/B features an ultrafast trigger input that exhibits a typically of 10 ns delay from its activation to the turn-off of the SR MOSFET. The main purpose of this input is to turn-off the SR MOSFET in applications operating in CCM mode via a signal coming from the primary side or direct synchronization SR MOSFET turn-on and turn-off event according to primary controller signals. The NCP4304A/B operation can be disabled using the TRIG/DIS input. If the TRIG/DIS input is pulled high (above 2.5 V) the driver is disabled immediately, except during DRV rising edge when TRIG/DIS is blanked for 120 ns. If the trigger signal is high for more than 100 µs the driver enters standby mode. The IC consumption is reduced below 100 µA during the standby mode. The device recovers operation in 10 µs when the trigger voltage is increased to exit standby mode. TRIG/DIS input is superior to CS input except blanking period. TRIG/DIS signal turns-OFF the SR MOSFET or disable its turn-ON if TRIG/DIS is pulled above $V_{TRIG/DIS}$.

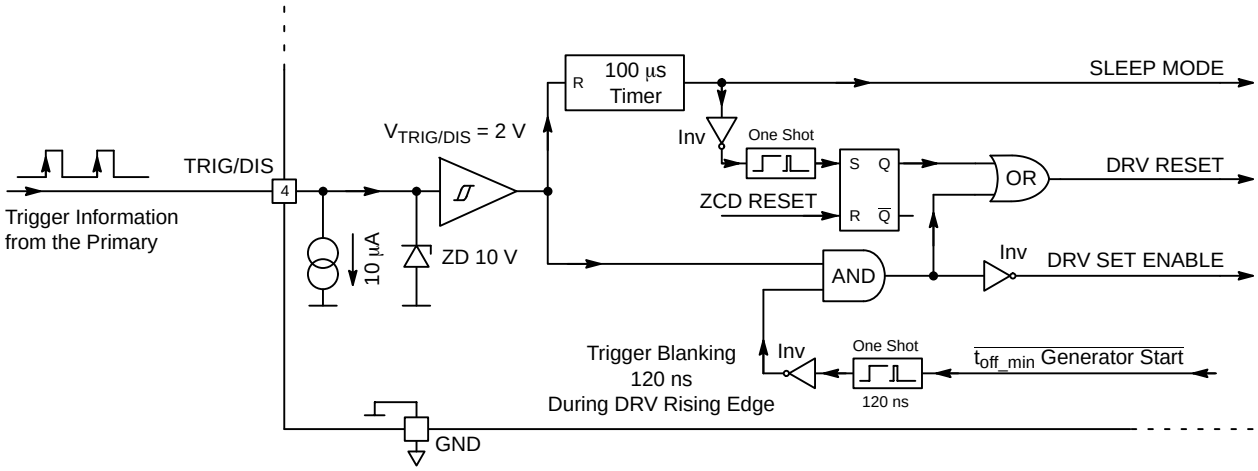

Figure 47. Trigger Input Internal Circuitry

Figure 48 depicts driver turn-ON events. Turn-ON of the SR MOSFET is possible if CS (V_{DS}) signal falls under $V_{th_cs_on}$ threshold and TRIG/DIS is pulled LOW (t1 to t3 time interval).

When the CS (V_{DS}) reached the $V_{th_cs_on}$ threshold and TRIG/DIS is pulled HIGH the driver stays LOW (t6, t7 time markers) if the TRIG/DIS is HIGH. If the TRIG/DIS is pulled LOW and CS (V_{DS}) is still under $V_{th_cs_on}$ threshold then the DRV is turned-ON (t7 marker).

Time markers t14 and t15 in Figure 48 demonstrate situation when CS (V_{DS}) is above $V_{th_cs_on}$ threshold and TRIG/DIS is pulled down. In this case the driver stays LOW (t12 to t15 marker).

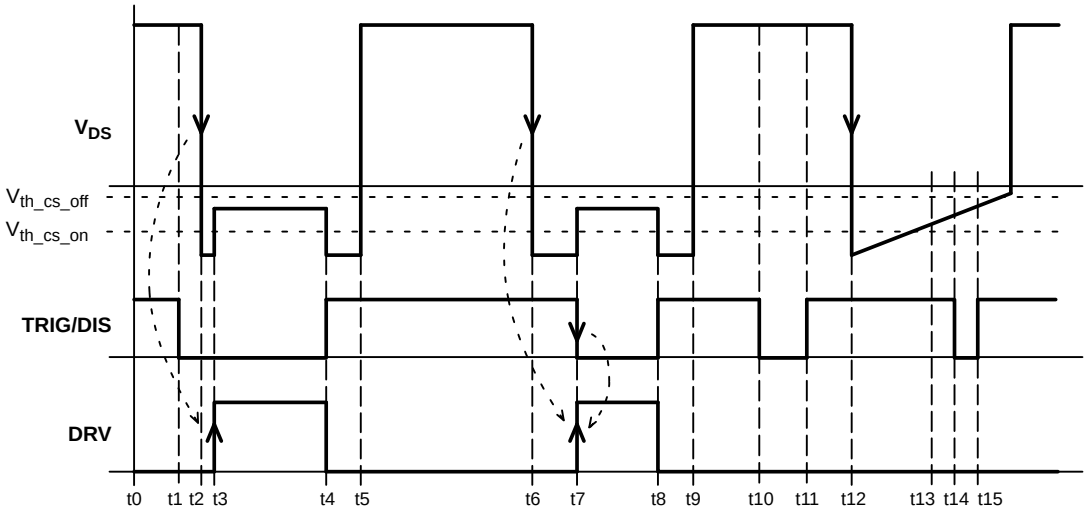

Figure 48. DRV Turn ON Events

The TRIG/DIS input is blanked for 120 ns after DRV set signal to avoid undesirable behavior during SR MOSFET turn-ON event. The blanking time in combination with high threshold voltage (2 V) prevent triggering on ringing and spikes that are present on the TRIG/DIS input pin during the SR MOSFET turn-on process. DRV response to the short needle pulse on the TRIG/DIS pin is depicted in Figure 49 – this short pulse turns-on the DRV for 120 ns.

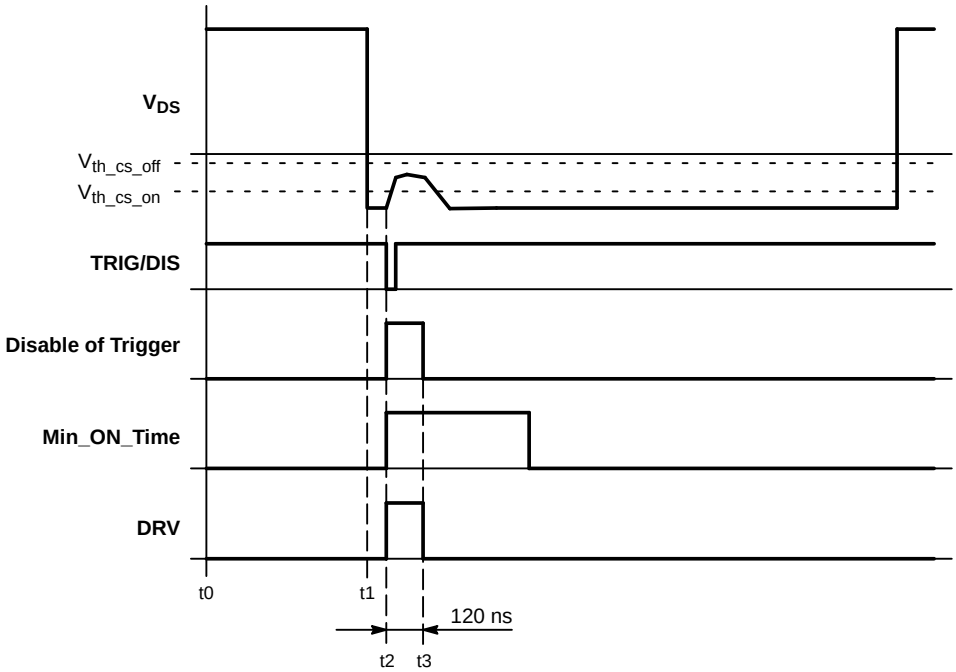

Figure 49. Trigger Needle Pulse and Trigger Blank Sequence

Advantage of the trigger blanking time during DRV turn-ON event is evident from Figure 50. Rising edge of the DRV signal may cause additional spikes on the TRIG/DIS input. These spikes, in combination with ultra-fast performance of the trigger logic, could turn-OFF the SR MOSFET in inappropriate time. Implementation of the trigger blanking time period helps to avoid such situation.

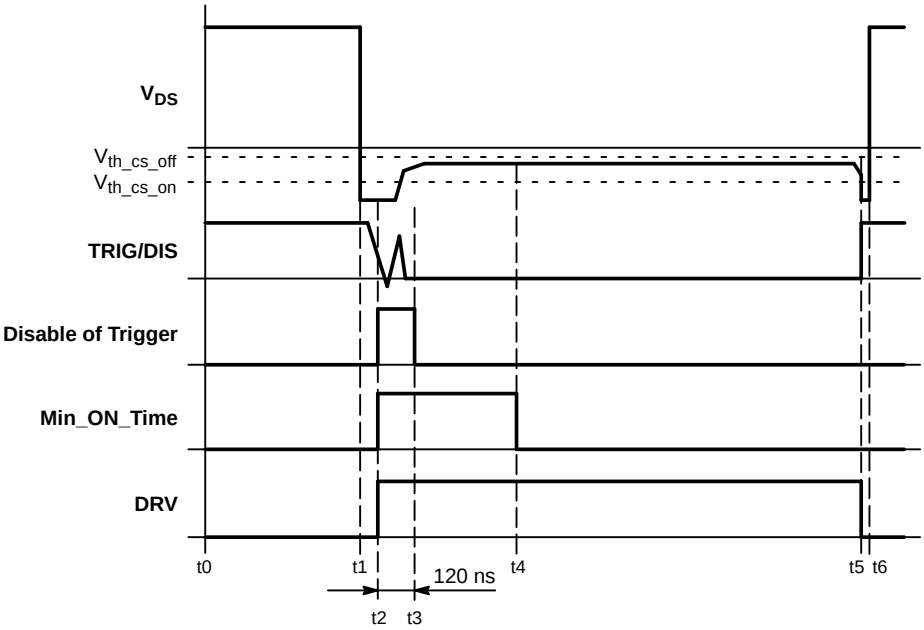

Figure 50. Trigger Blanking Masked-out Noise in Trigger Signal During Switch-ON Event

Figure 51 depicts driver turn-OFF events in details. If the CS (V_{DS}) stays below $V_{th_cs_off}$ threshold driver is turned-OFF according to rising edge of the TRIG/DIS signal. TRIG/DIS can turn-OFF the driver also during minimum-ON time period (time marker t2 and t3 in Figure 51).

Figure 52 depicts another driver turn-OFF events in details. Driver is turned-OFF according to the CS (V_{DS}) signal (t2 marker) and only after minimum-ON time elapsed. TRIG/DIS signal needs to be LOW during this event. If the CS (V_{DS}) voltage reaches $V_{th_cs_off}$ threshold before minimum-ON time period ends and TRIG/DIS pin is LOW the DRV is turned-OFF on the falling edge of the minimum-ON time period (t4 and t6 time markers in Figure 52).

Figure 53 depicts performance of the NCP4304A/B controller when trigger pin is permanently pulled LOW. In this case the DRV is turned ON and OFF according to the CS (V_{DS}) signal. The driver can be turned off only after minimum-ON time period elapsed. The driver is turned-ON in the time when CS (V_{DS}) reaches $V_{th_cs_on}$ threshold (t1−t2, t5–t6, t9–t10 markers). DRV is turned-OFF if CS (V_{DS}) signal reaches $V_{th_cs_off}$ threshold (t4 marker). The DRV ON-time is prolonged till minimum-ON time period falling edge if the CS (V_{DS}) reaches $V_{th_cs_off}$ before minimum-ON time period elapsed (t7−t8, t11−t12 markers).

Figure 54 depicts entering into the sleep mode. If the TRIG/DIS is pulled up for more than 100 μs the NCP4304A/B enters low consumption mode. The DRV stays LOW (disabled) during entering sleep mode.

Figure 55 shows sleep mode transition 2nd case – i.e. TRIG/DIS rising edge comes during the trigger blank period.

Figure 56 depicts entering into sleep mode and wake-up sequence.

Figures 57 and 58 show wake-up situations in details. If the NCP4304A/B is in sleep mode and TRIG/DIS is pulled LOW NCP4304A/B requires up to 10 μs period to recover all internal circuitry to normal operation mode. The driver is then enabled in the next cycle of CS (V_{DS}) signal only. The DRV stays LOW during waking-up time period.

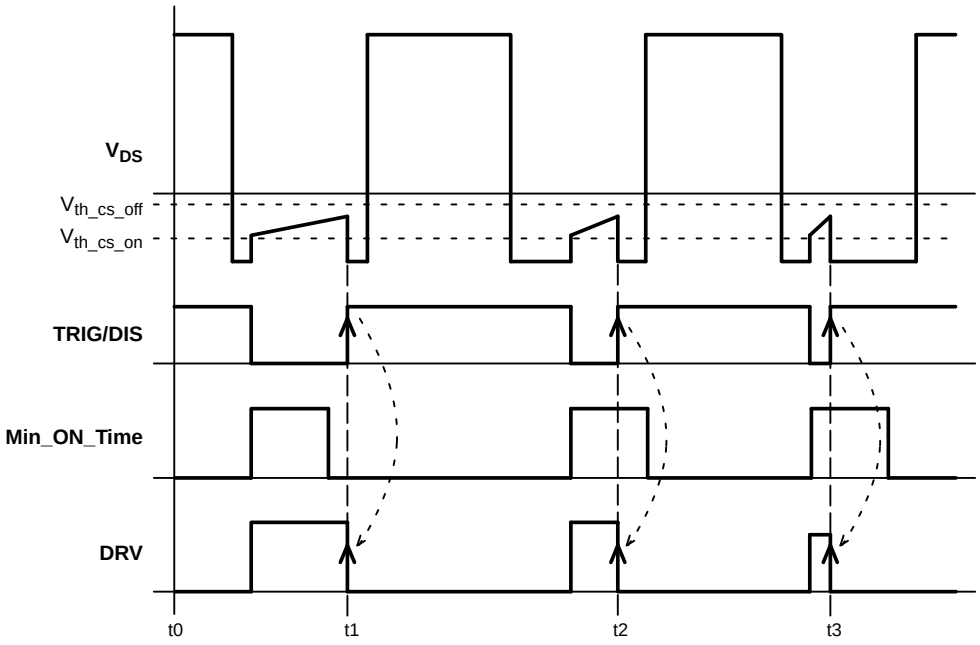

Figure 51. Driver Turn-OFF Events Based on the TRIG/DIS Input

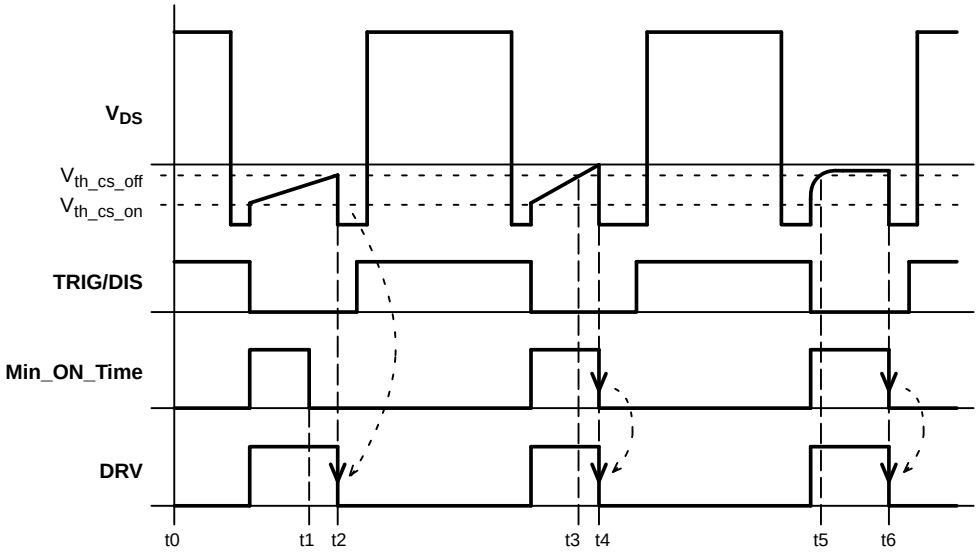

Figure 52. Driver OFF Sequence Chart 2

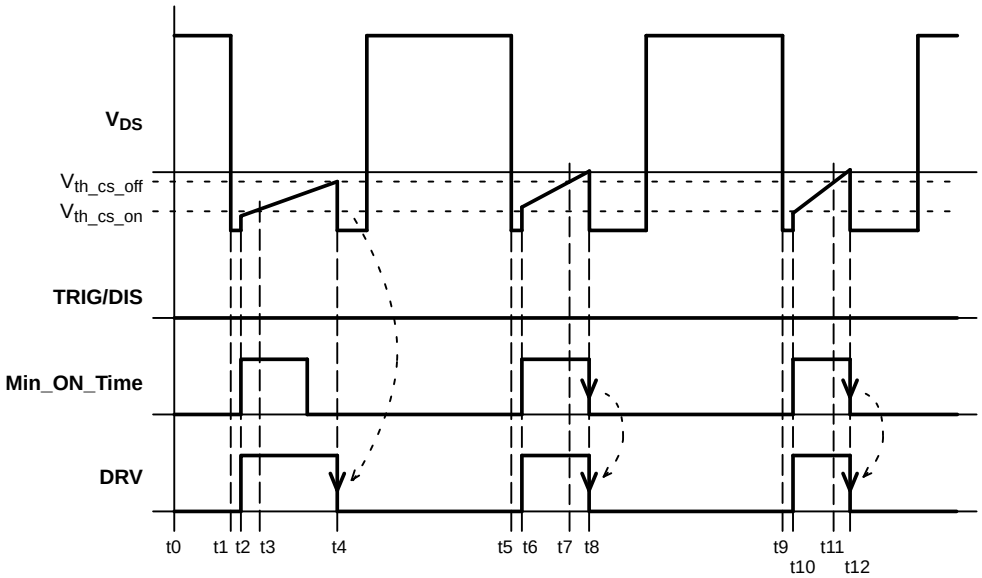

Figure 53. TRIG/DIS is LOW Sequence Chart

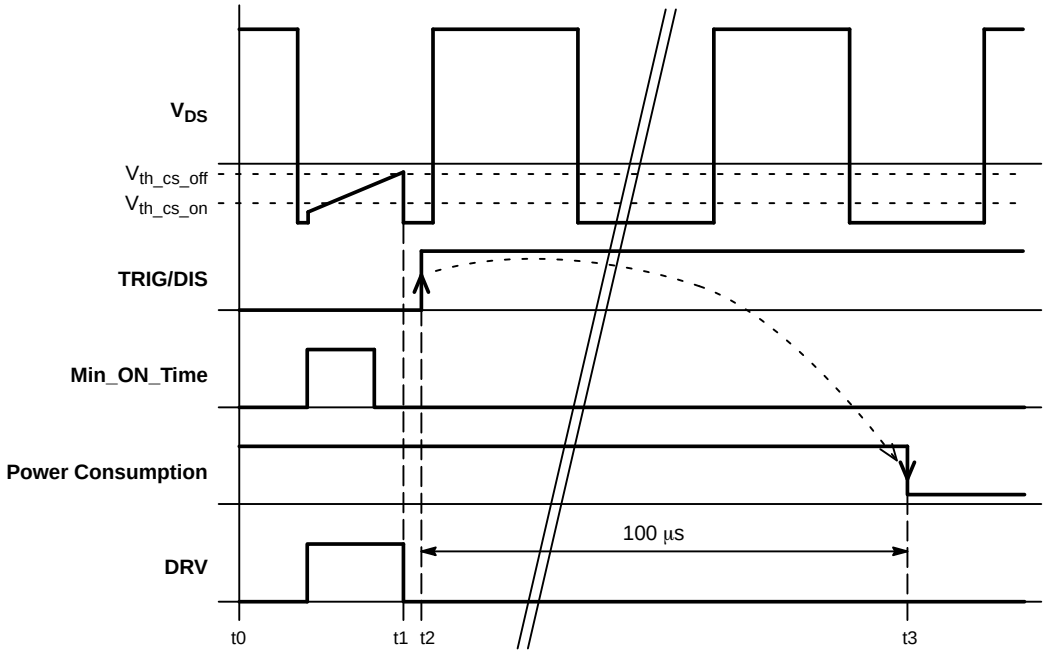

Figure 54. TRIG/DIS from LOW to HIGH Sequence 1

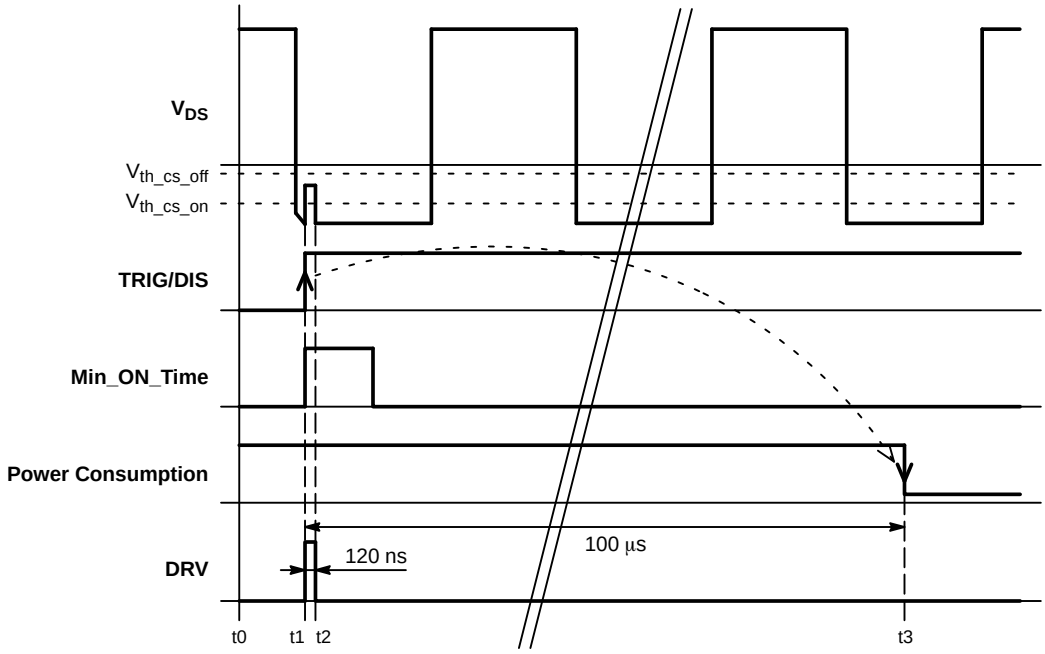

Figure 55. TRIG/DIS from LOW to HIGH Sequence 2

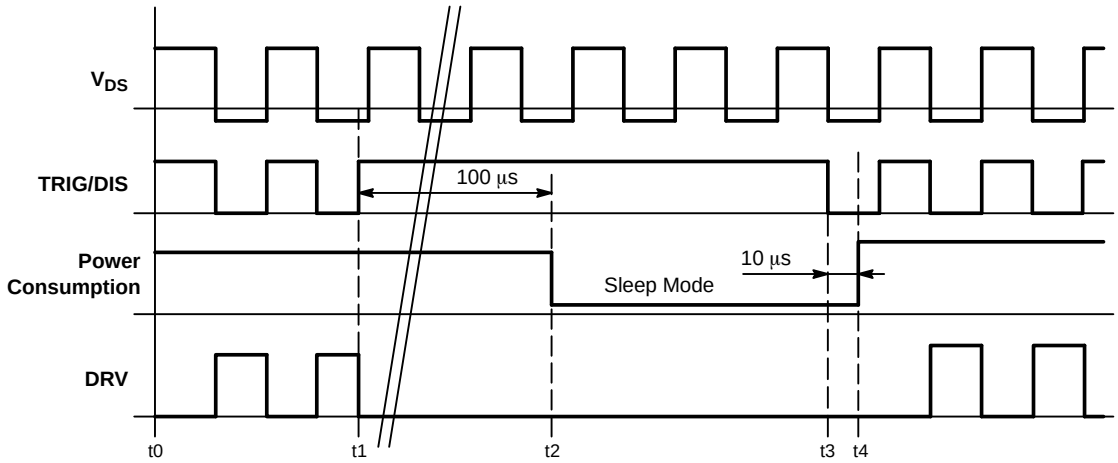

Figure 56. Sleep Mode Sequence

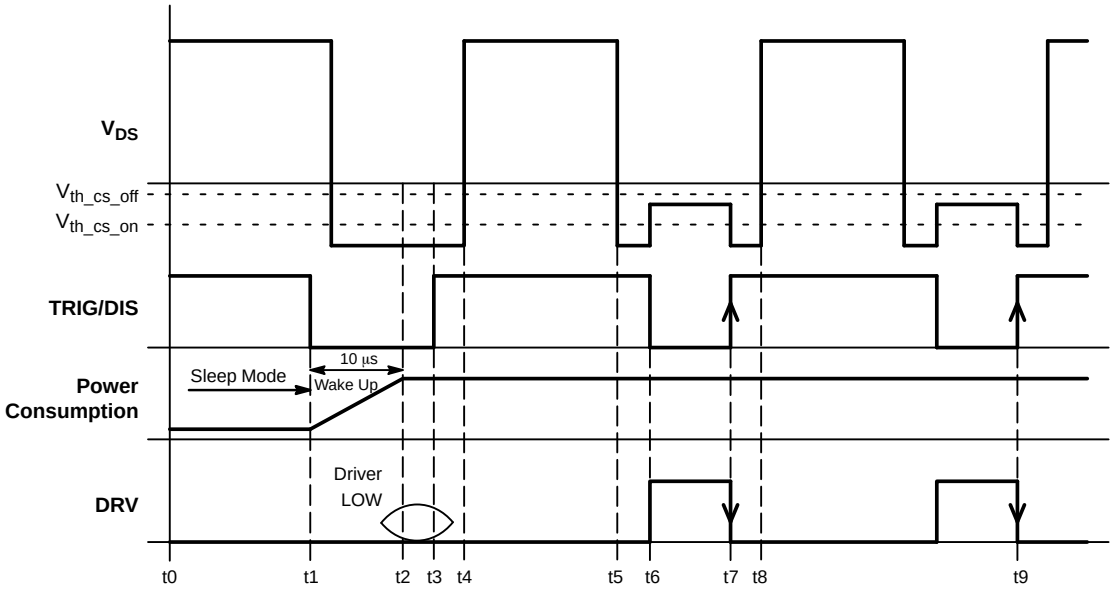

Figure 57. Waking-up Sequence

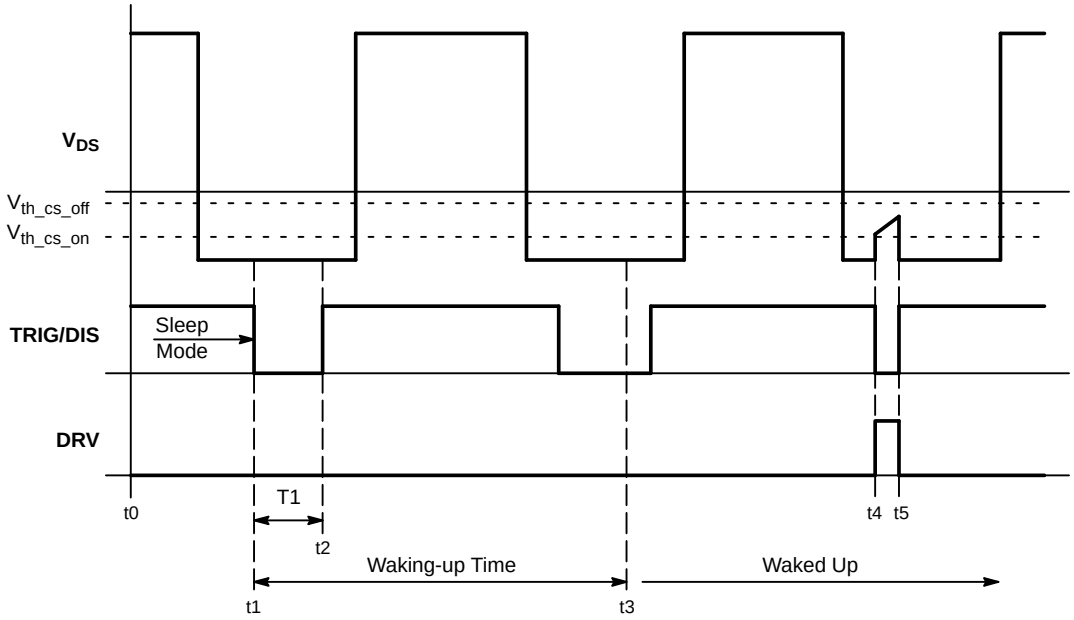

Figure 58. Wake-up Time Sequence

Figure 59 shows IC behavior in case the trigger signal features two pulses during one cycle of the V_{DS} (CS) signal. TRIG/DIS enables driver at time t1 and DRV turns ON because the V_{DS} voltage is under $V_{th_cs_on}$ threshold voltage. The trigger signal and consequently DRV output fall down in time t2. The minimum OFF time generator is triggered in time t2. TRIG/DIS drops down to LOW level in time t3 but there is still minimum OFF time sequence present so the DRV output stays low. When the minimum OFF time sequence elapses in time t4 the DRV is turned ON. In time t5 Trigger signal rises up and terminates this cycle of the CS signal in time t5. Next cycle starts in time t6. Trigger enables DRV and V_{DS} is under $V_{th_cs_on}$ threshold voltage so DRV turns ON in time t6. TRIG/DIS signal rises up to HIGH level in time t7, consequently DRV turns OFF and this starts minimum OFF time generator. Because minimum OFF time period is longer then the rest of time to the end of cycle of V_{DS} − DRV is disabled.

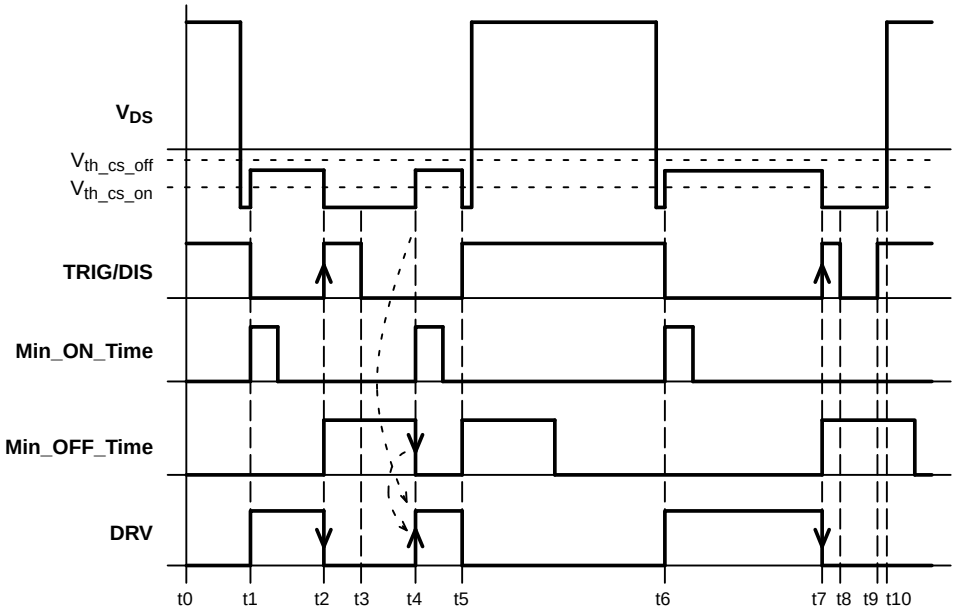

Figure 59. IC Behavior when Multiple Trigger Pulses Appear on TRIG/DIS Input

Note that the TRIG/DIS input is an ultrafast input that is sensitive even to very narrow voltage pulses. Thus it is wise to keep this input on a low impedance path and provide it with a clean triggering signal in the time this input is enabled by internal logic.

A typical application schematic of a CCM flyback converter with the NCP4304A/B driver can be seen in Figure 60. In this application the trigger signal is taken directly from the flyback controller driver output and transmitted to the secondary side by pulse transformer TR2. Because the TRIG/DIS input is edge sensitive, it is not necessary to transmit the entire primary driver pulse to the secondary. The coupling capacitor C5 is used to allow pulse transformer core reset and also to prepare a needle pulse (a pulse with width lower than 100 ns) to be transmitted to the NCP4304A/B TRIG/DIS input. The advantage of needle trigger pulse usage is that the required volt-second product of the pulse transformer is very low and that allows the designer to use very small and cheap magnetics. The trigger transformer can be for instance prepared on a small toroidal ferrite core with diameter of 8 mm. Proper safety insulation between primary and secondary sides can be easily assured by using triple insulated wire for one or even both windings.

The primary MOSFET gate voltage rising edge is delayed by external circuitry consisting of transistors Q1, Q2 and surrounding components. The primary MOSFET is thus turned-on with a slight delay so that the secondary controller turns-off the SR MOSFET by trigger signal prior to the primary switching. This method reduces the commutation losses and the SR MOSFET drain voltage spike, which results in improved efficiency.

It is also possible to use capacitive coupling (use additional capacitor with safety insulation) between the primary and secondary to transmit the trigger signal. We do not recommend this technique as the parasitic capacitive currents between primary and secondary may affect the trigger signal and thus overall system functionality.

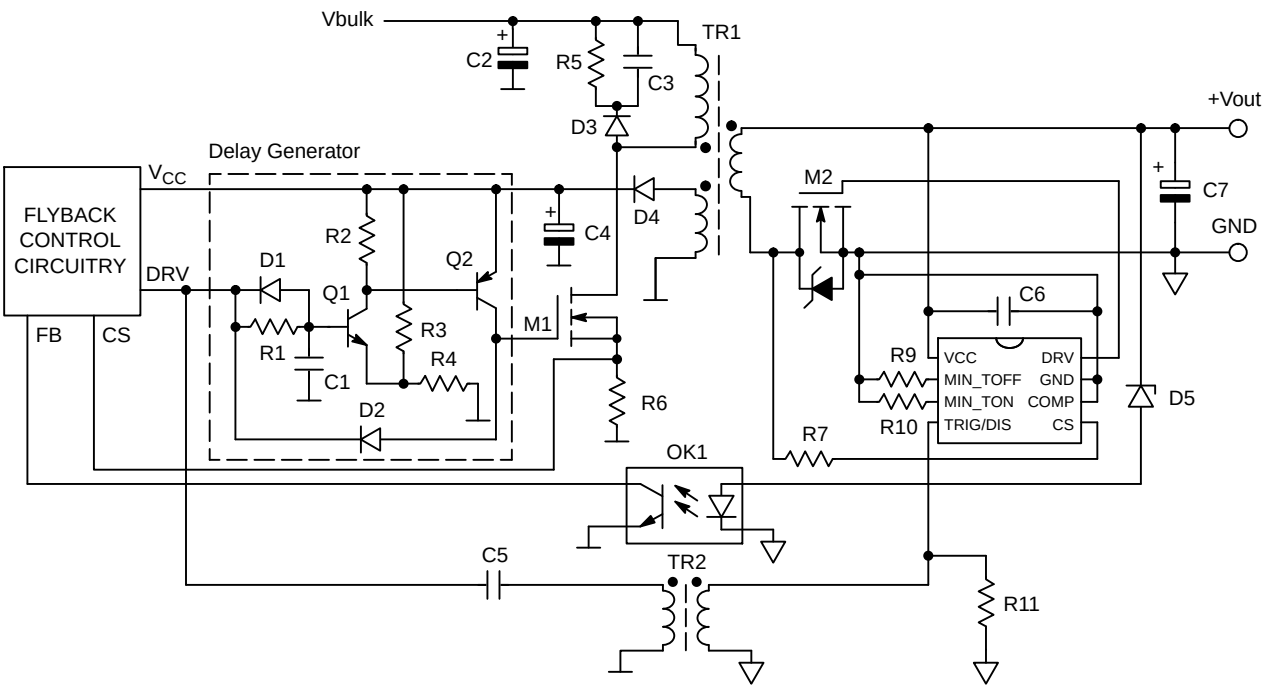

Figure 60. Typical Application Schematic when NCP4304A/B is Used in CCM Flyback Converter

t_{on_min} and t_{off_min} Adjustment

The NCP4304A/B offers adjustable minimum ON and OFF time periods that ease the implementation of the synchronous rectification system in a power supply. These timers avoid false triggering on the CS input after the MOSFET is turned on or off. The adjustment is based on an internal timing capacitance and external resistors connected to the GND pin – refer to Figure 61 for better understanding.

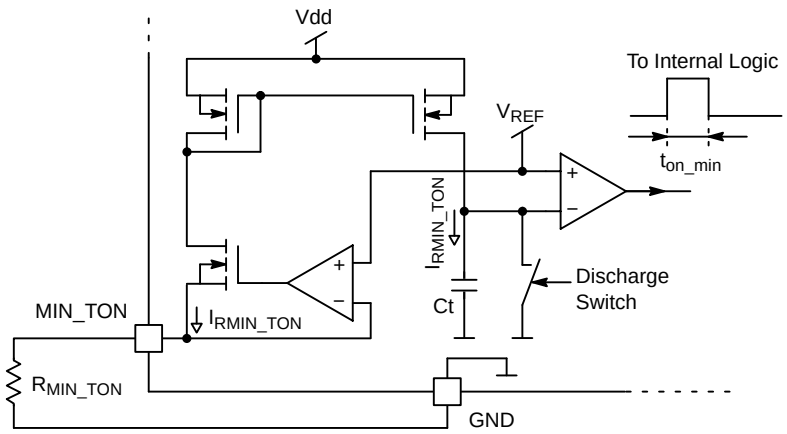

Figure 61. Internal Circuitry of t_{on_min} Generator (t_{off_min} Generator Works in the Same Way)

Current through the R_{MIN_TON} adjust resistor can be calculated as:

$$I_{RMIN_TON} = \frac{V_{REF}}{R_{MIN_TON}} \qquad \text{(eq. 4)}$$

As the same current is used for the internal timing capacitor (C_t) charging, one can calculate the minimum on-time duration using this equation.

$$t_{on_min} = C_t \cdot \frac{V_{REF}}{I_{RMIN_TON}} = C_t \cdot \frac{\frac{V_{REF}}{V_{REF}}}{R_{MIN_TON}} \qquad \text{(eq. 5)}$$

$$= C_t \cdot R_{MIN_TON}$$

As can be seen from Equation 5, the minimum ON and OFF times are independent of the V_{REF} or VCC level. The

internal capacitor size would be too high if we would use directly I_{RMIN_TON} current thus this current is decreased by the internal current mirror ratio. One can then estimate minimum t_{on} and t_{off} blanking periods from measured values in Figures 62 and 63.

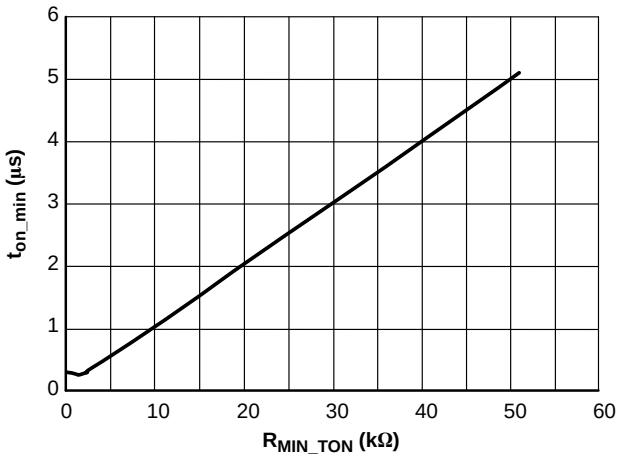

Figure 62. MIN_TON Adjust Characteristic

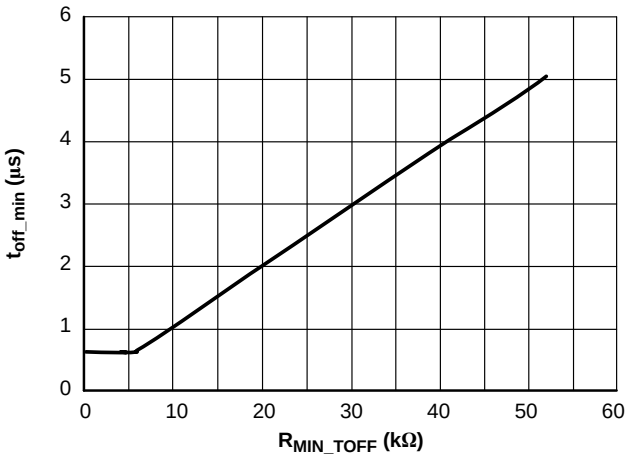

Figure 63. MIN_TOFF Adjust Characteristic

The absolute minimum t_{on} duration is internally clamped to 130 ns and minimum t_{off} duration to 600 ns in order to prevent any potential issues with the minimum t_{on} and/or t_{off} input being shorted to GND.

Some applications may require adaptive minimum on and off time blanking periods. With NCP4304A/B it is possible to modulate blanking periods by using an external NPN transistor − refer to Figure 64. The modulation signal can be derived based on the load current or feedback regulator voltage.

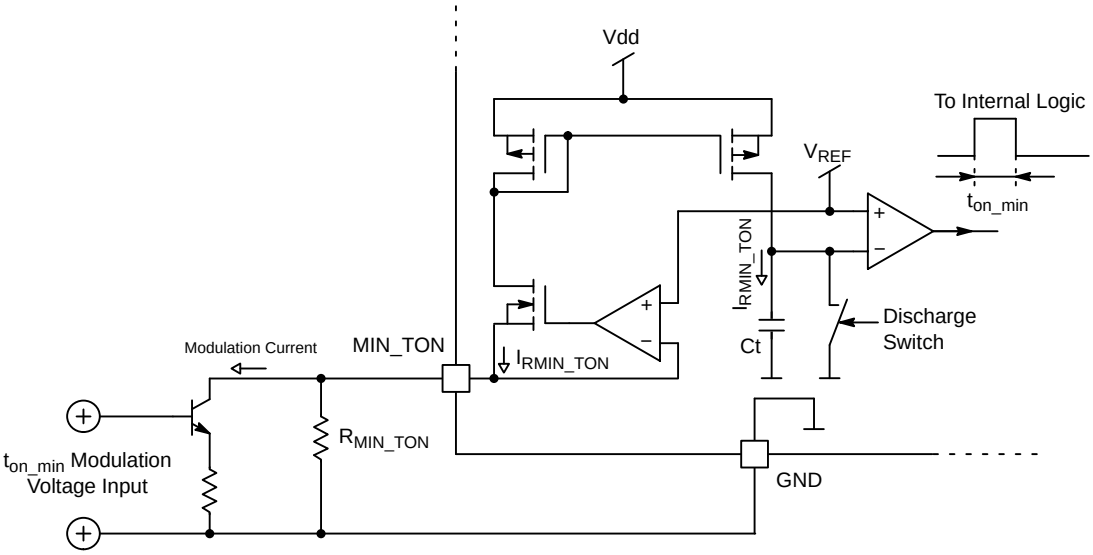

Figure 64. Possible Connection for t_{on_min} and t_{off_min} Modulation

In LLC applications with a very wide operating frequency range it is necessary to have very short minimum on time and off time periods in order to reach the required maximum operating frequency. However, when a LLC converter operates under low frequency, the minimum off time period may then be too short. To overcome possible issues with the LLC operating under low line and light load conditions, one can prolong the minimum off time blanking period by using resistors R_{DRAIN1} and R_{DRAIN2} connected from the opposite SR MOSFET drain – refer to Figure 65.

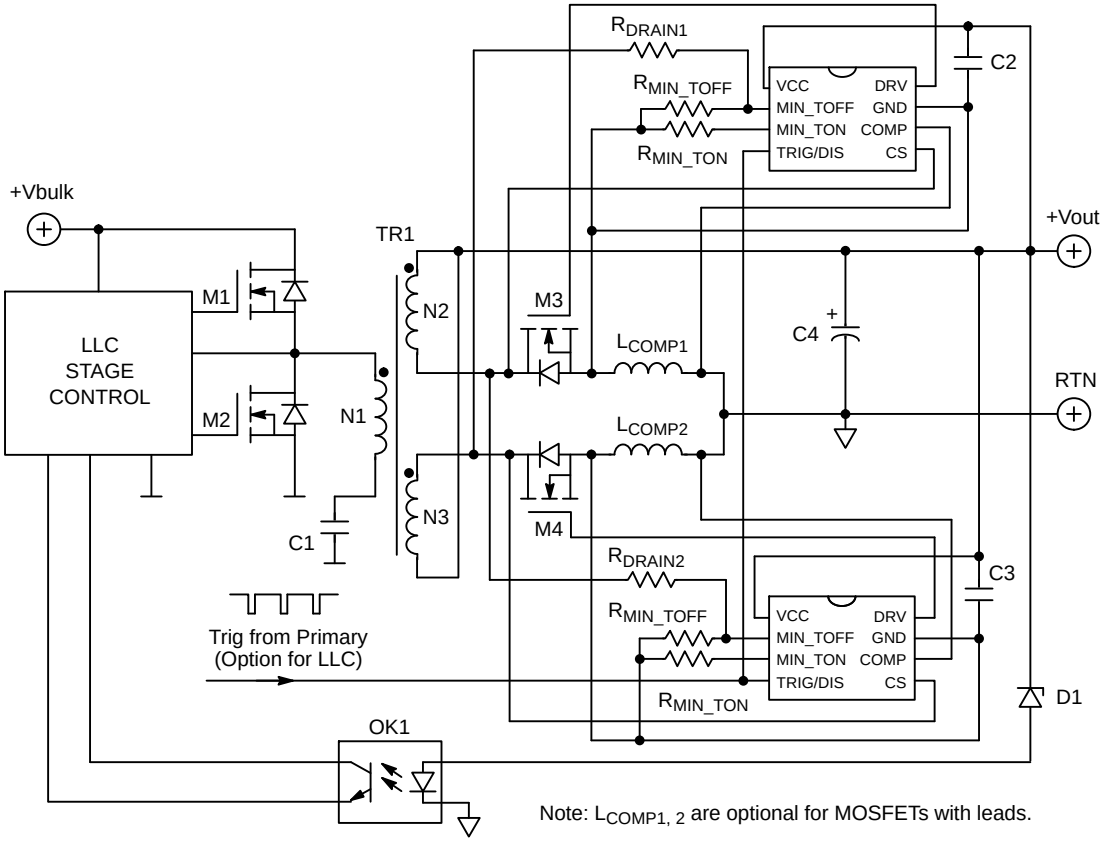

Figure 65. Possible Connection for t_{off_min} Prolongation in LLC Application with Wide Operating Frequency Range

Note that R_{DRAIN1} and R_{DRAIN2} should be designed in such a way that the maximum pulse current into the MIN_TOFF adjust pin is below 10 mA. Voltage on the MIN_TOFF and MIN_TON pins is clamped by internal zener protection to 10 V.

Power Dissipation Calculation

It is important to consider the power dissipation in the MOSFET driver of a SR system. If no external gate resistor is used and the internal gate resistance of the MOSFET is very low, nearly all energy losses related to gate charge are dissipated in the driver. Thus it is necessary to check the SR driver power losses in the target application to avoid over temperature and to optimize efficiency.

In SR systems the body diode of the SR MOSFET starts conducting before turn on because the $V_{th_cs_on}$ threshold level is below 0 V. On the other hand, the SR MOSFET turn off process always starts before the drain to source voltage rises up significantly. Therefore, the MOSFET switch always operates under Zero Voltage Switching (ZVS) conditions when implemented in a synchronous rectification system.

The following steps show how to approximately calculate the power dissipation and DIE temperature of the NCP4304A/B controller. Note that real results can vary due to the effects of the PCB layout on the thermal resistance.

Step 1 – MOSFET Gate-to-Source Capacitance:

During ZVS operation the gate to drain capacitance does not have a Miller effect like in hard switching systems because the drain to source voltage is close to zero and its change is negligible.

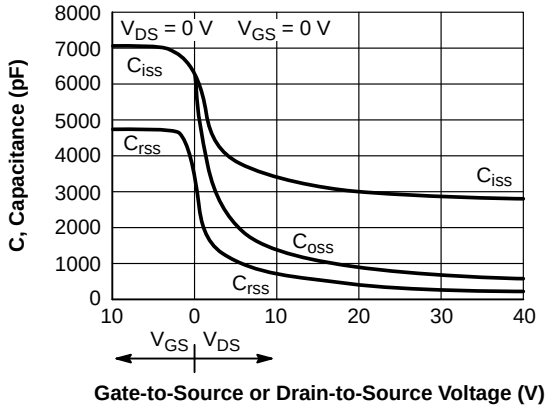

$C_{iss} = C_{gs} + C_{gd}$
$C_{rss} = C_{gd}$
$C_{oss} = C_{ds} + C_{gd}$

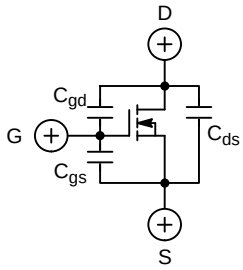

Figure 66. Typical MOSFET Capacitance Dependency on V_{DS} and V_{GS} Voltage

Therefore, the input capacitance of a MOSFET operating in ZVS mode is given by the parallel combination of the gate to source and gate to drain capacitances (i.e. C_{iss} capacitance for given gate to source voltage). The total gate charge, Q_{g_total}, of most MOSFETs on the market is defined for hard switching conditions. In order to accurately calculate the driving losses in a SR system, it is necessary to determine the gate charge of the MOSFET for operation specifically in a ZVS system. Some manufacturers define this parameter as Q_{g_ZVS}. Unfortunately, most datasheets do not provide this data. If the C_{iss} (or Q_{g_ZVS}) parameter is not available then it will need to be measured. Please note that the input capacitance is not linear (as shown Figure 66) and it needs to be characterized for a given gate voltage clamp level.

Step 2 – Gate Drive Losses Calculation:

Gate drive losses are affected by the gate driver clamp voltage. Gate driver clamp voltage selection depends on the type of MOSFET used (threshold voltage versus channel resistance). The total power losses (driving loses and conduction losses) should be considered when selecting the gate driver clamp voltage. Most of today's MOSFETs for SR systems feature low $R_{DS(on)}$ for 5 V V_{GS} voltage and thus it is beneficial to use the B version. However, there is still a big group of MOSFETs on the market that require higher gate to source voltage − in this case the A version should be used.

The total driving loss can be calculated using the selected gate driver clamp voltage and the input capacitance of the MOSFET:

$$P_{DRV_total} = V_{CC} \cdot V_{clamp} \cdot C_{g_ZVS} \cdot f_{SW} \quad \text{(eq. 6)}$$

Where:

V_{CC}	is the supply voltage
V_{clamp}	is the driver clamp voltage
C_{g_ZVS}	is the gate to source capacitance of the MOSFET in ZVS mode
f_{sw}	is the switching frequency of the target application

The total driving power loss won't only be dissipated in the IC, but also in external resistances like the external gate resistor (if used) and the MOSFET internal gate resistance (Figure 67). Because NCP4304A/B features a clamped driver, it's high side portion can be modeled as a regular driver switch with equivalent resistance and a series voltage source. The low side driver switch resistance does not drop immediately at turn-off, thus it is necessary to use an equivalent value ($R_{drv_low_eq}$) for calculations. This method simplifies power losses calculations and still provides acceptable accuracy. Internal driver power dissipation can then be calculated using Equation 7:

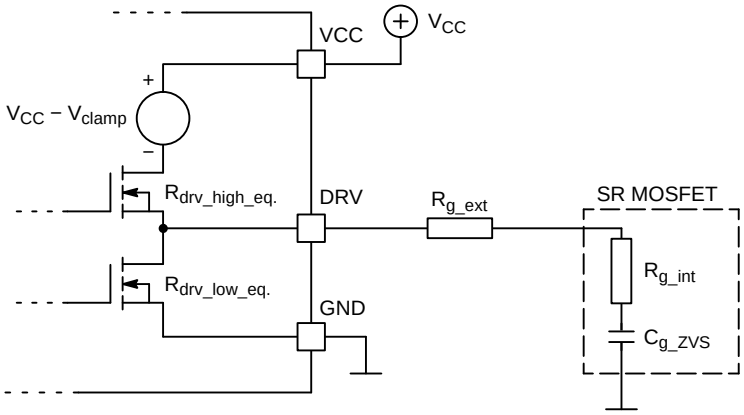

Figure 67. Equivalent Schematic of Gate Drive Circuitry

$$P_{DRV_IC} = \frac{1}{2} \cdot C_{g_ZVS} \cdot V_{clamp}{}^{2} \cdot f_{SW} \cdot \left(\frac{R_{drv_low_eq}}{R_{drv_low_eq} + R_{g_ext} + R_{g_int}} \right) + C_{g_ZVS} \cdot V_{clamp} \cdot f_{SW} \cdot \left(V_{CC} - V_{clamp} \right)$$

$$+ \frac{1}{2} \cdot C_{g_ZVS} \cdot V_{clamp}{}^{2} \cdot f_{SW} \cdot \left(\frac{R_{drv_high_eq}}{R_{drv_high_eq} + R_{g_ext} + R_{g_int}} \right) \quad \text{(eq. 7)}$$

Where:

$R_{drv_low_eq}$	is the Ddriver low side switch equivalent resistance (1.55 Ω)
$R_{drv_high_eq}$	is the driver high-side switch equivalent resistance (7 Ω)
R_{g_ext}	is the external gate resistor (if used)
R_{g_int}	is the internal gate resistance of the MOSFET

Step 3 – IC Consumption Calculation:

In this step, power dissipation related to the internal IC consumption is calculated. This power loss is given by the I_{CC} current and the IC supply voltage. The I_{CC} current depends on switching frequency and also on the selected t_{on_min} and t_{off_min} periods because there is current flowing out from the MIN_TON and MIN_TOFF pins. The most accurate method for calculating these losses is to measure the I_{CC} current when C_{DRV} = 0 nF and the IC is switching at the target frequency with given t_{on_min} and t_{off_min} adjust resistors. Refer also to Figure 68 for typical IC consumption charts when the driver is not loaded. IC consumption losses can be calculated as:

$$P_{ICC} = V_{CC} \cdot I_{CC} \quad \text{(eq. 8)}$$

Step 4 – IC Die Temperature Arise Calculation:

The die temperature can be calculated now that the total internal power losses have been determined (driver losses plus internal IC consumption losses). The SO−8 package thermal resistance is specified in the maximum ratings table for a 35 μm thin copper layer with no extra copper plates on any pin (i.e. just 0.5 mm trace to each pin with standard soldering points are used).

The die temperature is calculated as:

$$T_{DIE} = \left(P_{DRV_IC} + P_{ICC} \right) \cdot R_{\theta JA} + T_A \quad \text{(eq. 9)}$$

Where:

P_{DRV_IC}	is the IC driver internal power dissipation
P_{ICC}	is the IC control internal power dissipation
$R_{\theta JA}$	is the thermal resistance from junction to ambient
T_A	is the ambient temperature

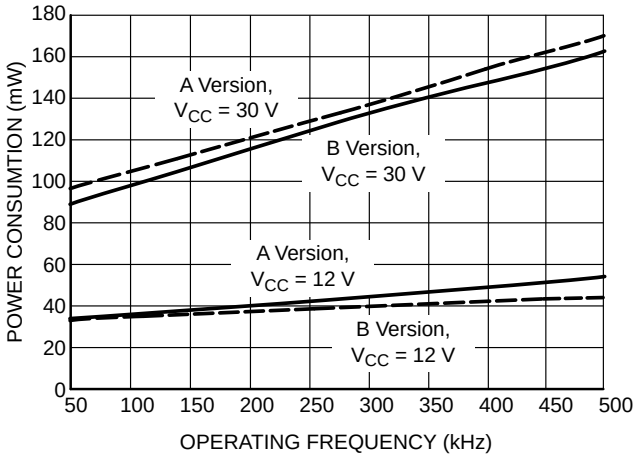

Figure 68. IC Power Consumption as a Function of Frequency for C_{DRV} = 0 nF, R_{MIN_TON} = R_{MIN_TOFF} = 5 kΩ

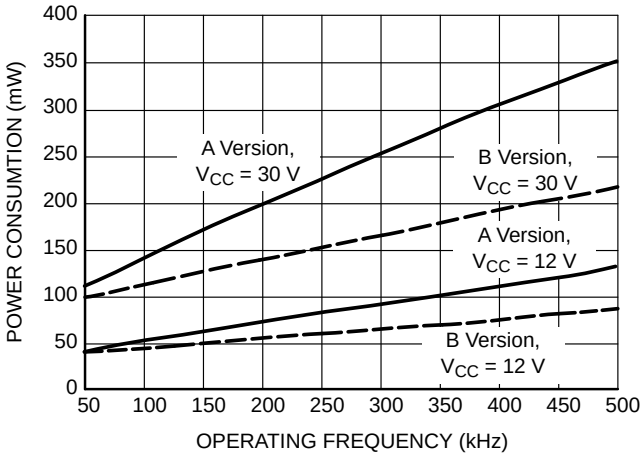

Figure 69. IC Power Consumption as a Function of Frequency for C_{DRV} = 1 nF, R_{MIN_TON} = R_{MIN_TOFF} = 5 kΩ

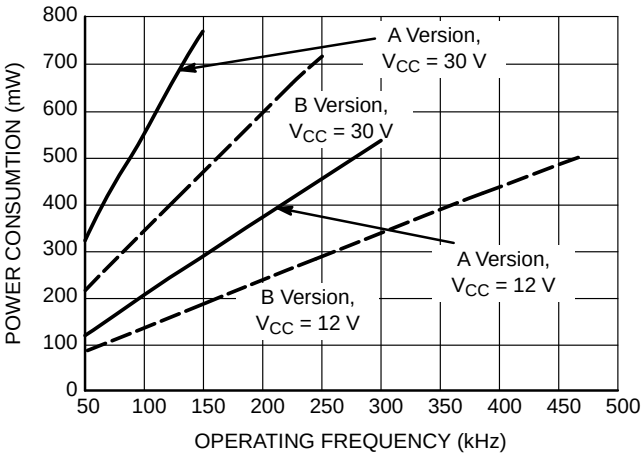

Figure 70. IC Power Consumption as a Function of Frequency for C_{DRV} = 10 nF, R_{MIN_TON} = R_{MIN_TOFF} = 5 kΩ

NCP4304A, NCP4304B

PACKAGE DIMENSIONS

SOIC−8 NB
CASE 751−07
ISSUE AK

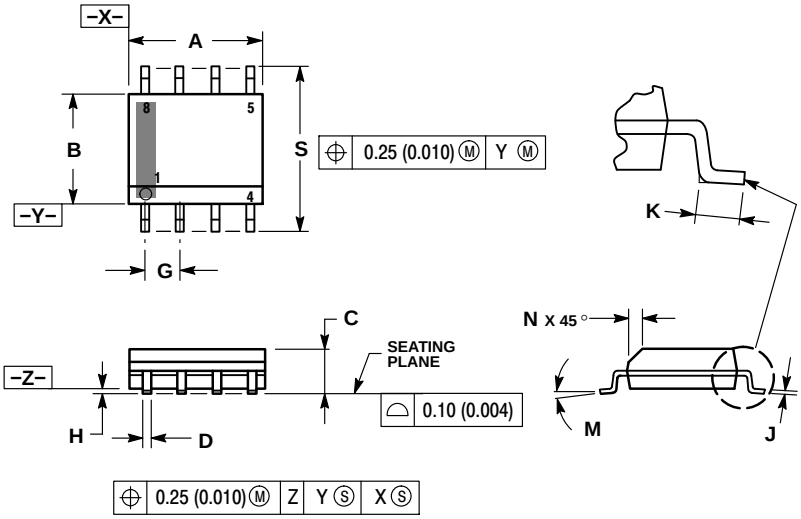

NOTES:
1. DIMENSIONING AND TOLERANCING PER ANSI Y14.5M, 1982.
2. CONTROLLING DIMENSION: MILLIMETER.
3. DIMENSION A AND B DO NOT INCLUDE MOLD PROTRUSION.
4. MAXIMUM MOLD PROTRUSION 0.15 (0.006) PER SIDE.
5. DIMENSION D DOES NOT INCLUDE DAMBAR PROTRUSION. ALLOWABLE DAMBAR PROTRUSION SHALL BE 0.127 (0.005) TOTAL IN EXCESS OF THE D DIMENSION AT MAXIMUM MATERIAL CONDITION.
6. 751−01 THRU 751−06 ARE OBSOLETE. NEW STANDARD IS 751−07.

	MILLIMETERS		INCHES	
DIM	MIN	MAX	MIN	MAX
A	4.80	5.00	0.189	0.197
B	3.80	4.00	0.150	0.157
C	1.35	1.75	0.053	0.069
D	0.33	0.51	0.013	0.020
G	1.27 BSC		0.050 BSC	
H	0.10	0.25	0.004	0.010
J	0.19	0.25	0.007	0.010
K	0.40	1.27	0.016	0.050
M	0 °	8 °	0 °	8 °
N	0.25	0.50	0.010	0.020
S	5.80	6.20	0.228	0.244

SOLDERING FOOTPRINT*

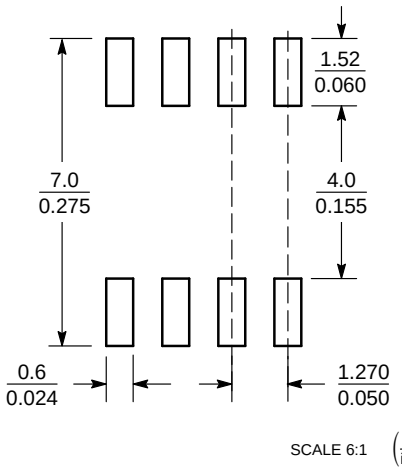

*For additional information on our Pb−Free strategy and soldering details, please download the ON Semiconductor Soldering and Mounting Techniques Reference Manual, SOLDERRM/D.

NCP4304A, NCP4304B

PACKAGE DIMENSIONS

DFN8 4x4
CASE 488AF
ISSUE C

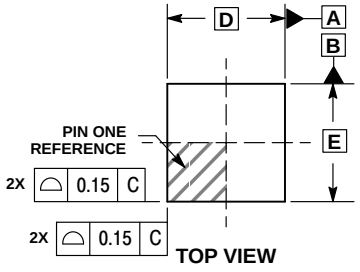

TOP VIEW

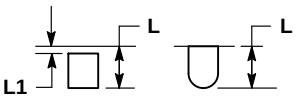

DETAIL A
OPTIONAL CONSTRUCTIONS

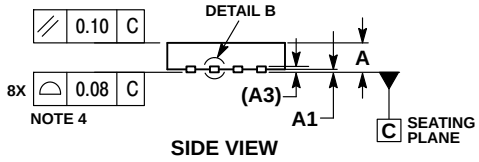

SIDE VIEW

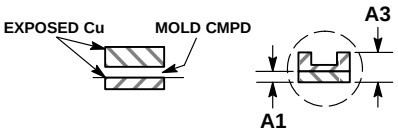

DETAIL B
ALTERNATE CONSTRUCTIONS

NOTES:
1. DIMENSIONS AND TOLERANCING PER ASME Y14.5M, 1994.
2. CONTROLLING DIMENSION: MILLIMETERS.
3. DIMENSION b APPLIES TO PLATED TERMINAL AND IS MEASURED BETWEEN 0.15 AND 0.30MM FROM TERMINAL TIP.
4. COPLANARITY APPLIES TO THE EXPOSED PAD AS WELL AS THE TERMINALS.
5. DETAILS A AND B SHOW OPTIONAL CONSTRUCTIONS FOR TERMINALS.

	MILLIMETERS	
DIM	MIN	MAX
A	0.80	1.00
A1	0.00	0.05
A3	0.20 REF	
b	0.25	0.35
D	4.00 BSC	
D2	1.91	2.21
E	4.00 BSC	
E2	2.09	2.39
e	0.80 BSC	
K	0.20	–––
L	0.30	0.50
L1	–––	0.15

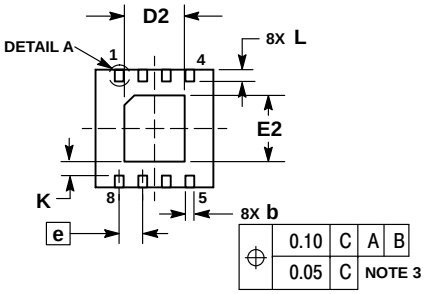

BOTTOM VIEW

SOLDERING FOOTPRINT*

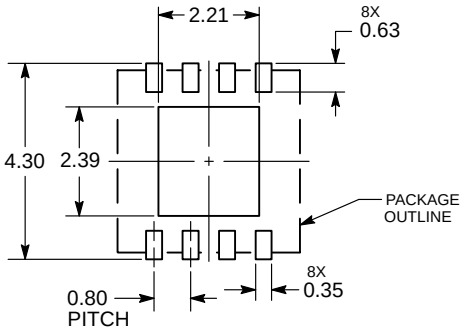

DIMENSIONS: MILLIMETERS

*For additional information on our Pb−Free strategy and soldering details, please download the ON Semiconductor Soldering and Mounting Techniques Reference Manual, SOLDERRM/D.

ON Semiconductor and the ON are registered trademarks of Semiconductor Components Industries, LLC (SCILLC) or its subsidiaries in the United States and/or other countries. SCILLC owns the rights to a number of patents, trademarks, copyrights, trade secrets, and other intellectual property. A listing of SCILLC's product/patent coverage may be accessed at www.onsemi.com/site/pdf/Patent−Marking.pdf. SCILLC reserves the right to make changes without further notice to any products herein. SCILLC makes no warranty, representation or guarantee regarding the suitability of its products for any particular purpose, nor does SCILLC assume any liability arising out of the application or use of any product or circuit, and specifically disclaims any and all liability, including without limitation special, consequential or incidental damages. "Typical" parameters which may be provided in SCILLC data sheets and/or specifications can and do vary in different applications and actual performance may vary over time. All operating parameters, including "Typicals" must be validated for each customer application by customer's technical experts. SCILLC does not convey any license under its patent rights nor the rights of others. SCILLC products are not designed, intended, or authorized for use as components in systems intended for surgical implant into the body, or other applications intended to support or sustain life, or for any other application in which the failure of the SCILLC product could create a situation where personal injury or death may occur. Should Buyer purchase or use SCILLC products for any such unintended or unauthorized application, Buyer shall indemnify and hold SCILLC and its officers, employees, subsidiaries, affiliates, and distributors harmless against all claims, costs, damages, and expenses, and reasonable attorney fees arising out of, directly or indirectly, any claim of personal injury or death associated with such unintended or unauthorized use, even if such claim alleges that SCILLC was negligent regarding the design or manufacture of the part. SCILLC is an Equal Opportunity/Affirmative Action Employer. This literature is subject to all applicable copyright laws and is not for resale in any manner.

PUBLICATION ORDERING INFORMATION

LITERATURE FULFILLMENT:
Literature Distribution Center for ON Semiconductor
19521 E. 32nd Pkwy, Aurora, Colorado 80011 USA
Phone: 303−675−2175 or 800−344−3860 Toll Free USA/Canada
Fax: 303−675−2176 or 800−344−3867 Toll Free USA/Canada
Email: orderlit@onsemi.com

N. American Technical Support: 800−282−9855 Toll Free USA/Canada
Europe, Middle East and Africa Technical Support:
Phone: 421 33 790 2910
Japan Customer Focus Center
Phone: 81−3−5817−1050

ON Semiconductor Website: **www.onsemi.com**

Order Literature: http://www.onsemi.com/orderlit

For additional information, please contact your local Sales Representative