# Excellent Integrated System Limited

Stocking Distributor

Click to view price, real time Inventory, Delivery & Lifecycle Information:

E-Switch
200MSP4T1B1M2QE

For any questions, you can email us directly:
sales@integrated-circuit.com

Distributor of E-Switch: Excellent Integrated System Limited
Datasheet of 200MSP4T1B1M2QE - SWITCH TOGGLE SPDT 3A 120V
Contact us: sales@integrated-circuit.com Website: www.integrated-circuit.com

SHEET OF

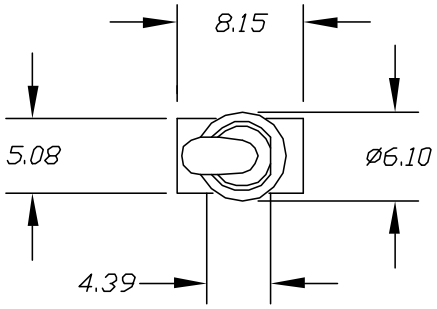


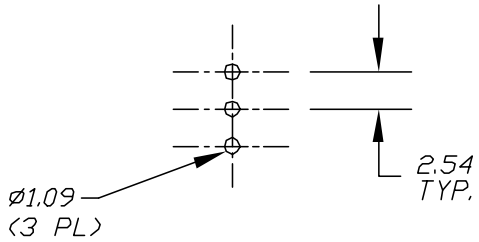


P.C.B. MOUNTING HOLES

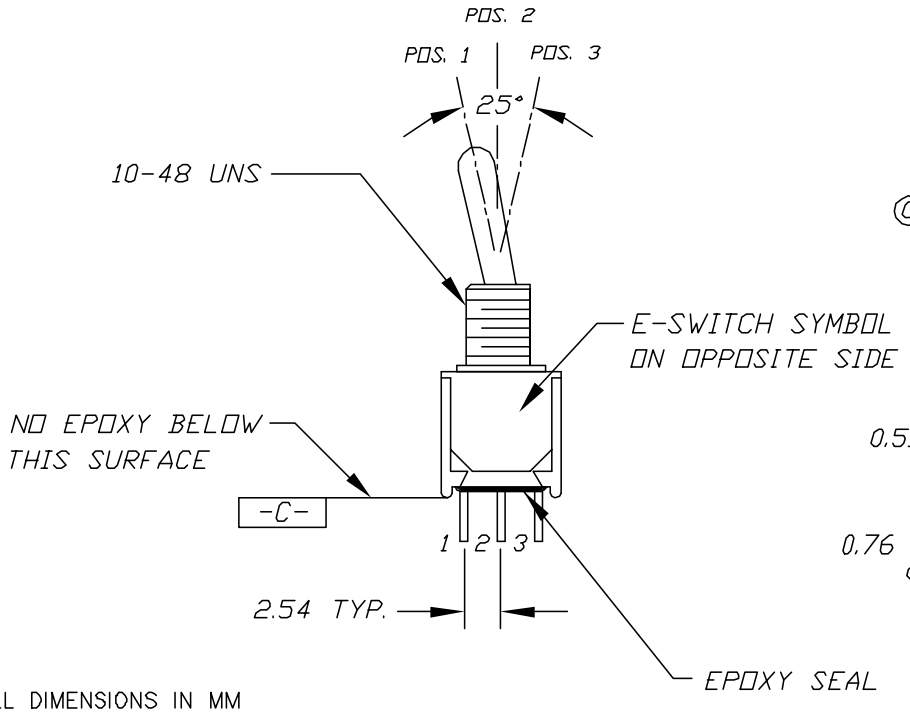


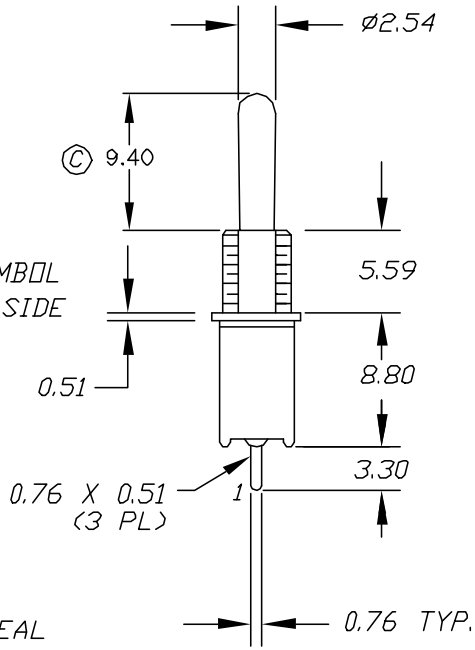


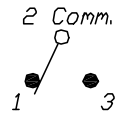


CIRCUIT: SPDT

CONTACT CONFIGURATION

NOTES:

1. ALL DIMENSIONS IN MM
2. GENERAL TOLERANCE: 0.00=±0.25
3. TERM. NOS. FOR REF ONLY
4. RATING: 3A @120VAC OR 28VDC; 1A @250VAC
5. ELECTRIC LIFE: 30,000 MAKE AND BREAK CYCLES AT FULL LOAD
6. INSULATION RESISTANCE: 1,000 MEGA-OHMS MIN
7. DIELECTRIC STRENGTH: 1,000V RMS @SEA LEVEL
8. OPERATING TEMP.: -30°C TO +85°C

| SWITCH FUNCTION | | |
|---|---|---|
| POS. 1 | POS. 2 | POS. 3 |
| (ON) | OFF | (ON) |
| 2-3 | OPEN | 2-1 |

( ) = MOMENTARY

| REV. | ECN No. | DESCRIPTION | DATE | CHKD |
|---|---|---|---|---|
| C | 11498 | REVISED ACTUATOR | 5/11/01 | CJB |
| B | 11113 | REVISED & REDRAWN | 12/13/00 | PML |

THE INFORMATION CONTAINED IN THIS DOCUMENT IS PROPRIETARY TO E-SWITCH AND IS NOT TO BE COPIED OR TRANSFERRED

E-SWITCH®

TITLE 200 MSP-4 T1 B1 M2 Q E

| SCALE | DATE | DR | DWG | REV |
|---|---|---|---|---|
| 2:1 | 10/20/00 | PML | T211083 | C |