Excellent Integrated System Limited

Stocking Distributor

Click to view price, real time Inventory, Delivery & Lifecycle Information:

Molex Connector Corporation
02-05-1105

For any questions, you can email us directly:
sales@integrated-circuit.com

2107

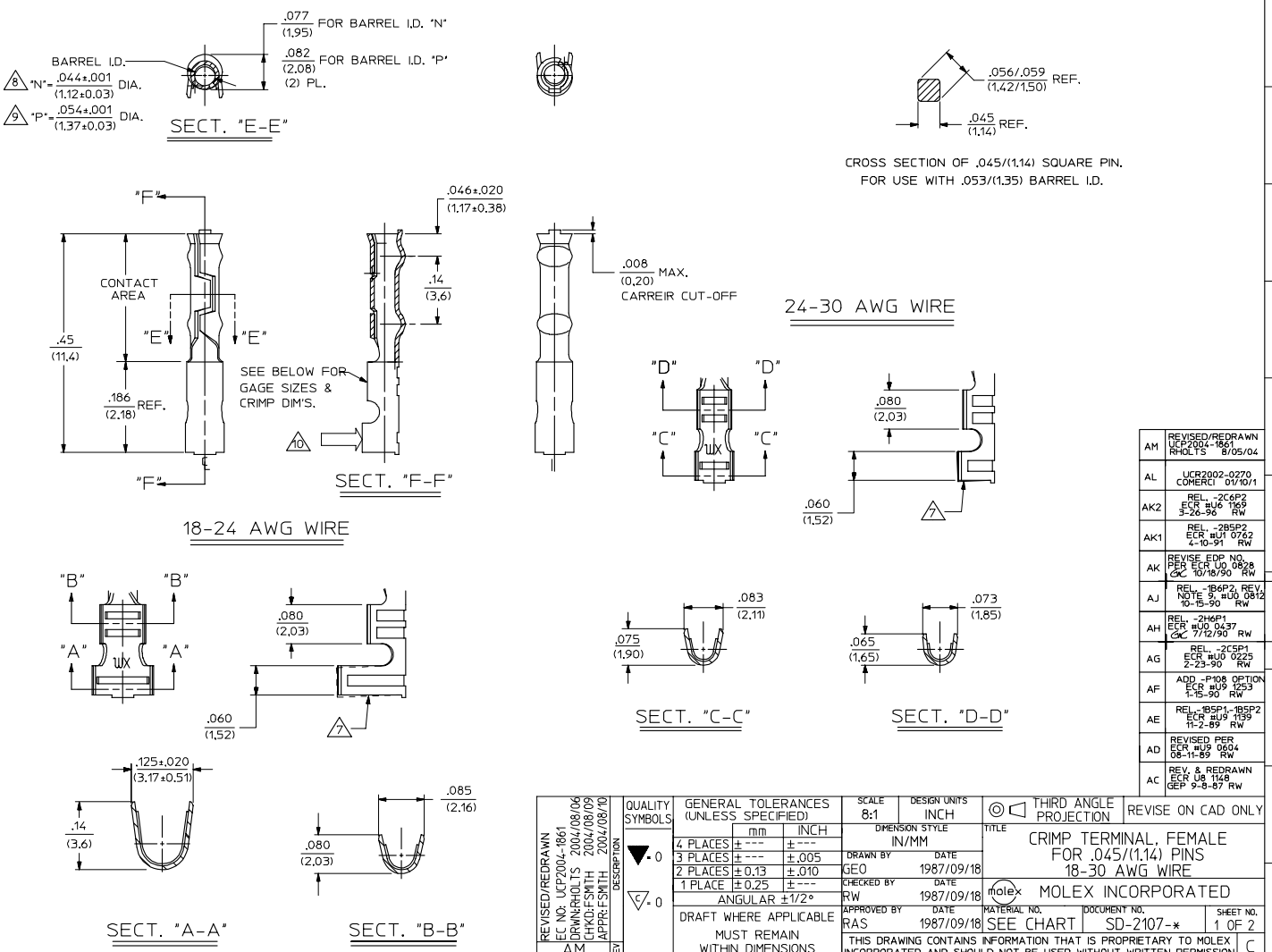

REV	DESCRIPTION
AM	REVISED/REDRAWN UCP2004-1861 RHOLTS 8/05/04
AL	UCR2002-0270 COMERCI 01/10/1
AK2	REL. -2C6P2 ECR #U6 1169 3-26-96 RW
AK1	REL. -2B5P2 ECR #U1 0762 4-10-91 RW
AK	REVISE EDP NO. PER ECR U0 0828 GK 10/18/90 RW
AJ	REL. -1B6P2, REV. NOTE 9, #U0 0812 10-15-90 RW
AH	REL. -2H6P1 ECR #U0 0437 GK 7/12/90 RW
AG	REL. -2C5P1 ECR #U0 0225 2-23-90 RW
AF	ADD -P108 OPTION ECR #U9 1253 1-15-90 RW
AE	REL.-1B5P1-1B5P2 ECR #U9 1139 11-2-89 RW
AD	REVISED PER ECR #U9 0604 08-11-89 RW
AC	REV. & REDRAWN ECR U8 1148 GEP 9-8-87 RW

REVISED/REDRAWN
EC NO: UCP2004-1861 2004/08/06
DRWN:RHOLTS 2004/08/09
CHKD:FSMITH 2004/08/09
APPR:FSMITH 2004/08/10
REV AM

QUALITY SYMBOLS: ▼ = 0 ; ⌔ = 0

GENERAL TOLERANCES (UNLESS SPECIFIED)

	mm	INCH
4 PLACES	± ---	± ---
3 PLACES	± ---	± .005
2 PLACES	± 0.13	± .010
1 PLACE	± 0.25	± ---
ANGULAR ±1/2°		

DRAFT WHERE APPLICABLE
MUST REMAIN WITHIN DIMENSIONS

SCALE 8:1 | DESIGN UNITS INCH | THIRD ANGLE PROJECTION | REVISE ON CAD ONLY
DIMENSION STYLE IN/MM
DRAWN BY GEO DATE 1987/09/18
CHECKED BY RW DATE 1987/09/18
APPROVED BY RAS DATE 1987/09/18

TITLE
CRIMP TERMINAL, FEMALE
FOR .045/(1.14) PINS
18-30 AWG WIRE

molex MOLEX INCORPORATED

MATERIAL NO. SEE CHART | DOCUMENT NO. SD-2107-* | SHEET NO. 1 OF 2

THIS DRAWING CONTAINS INFORMATION THAT IS PROPRIETARY TO MOLEX INCORPORATED AND SHOULD NOT BE USED WITHOUT WRITTEN PERMISSION C

tb_frame_C_P_ME_T
Rev. C 2002/05/05

2107

LEGEND

2107- X X X X X

- MATERIAL (SEE NOTE 1)
- FINISH (SEE NOTE 2)
- WIRE GAGE
  5=18-24 AWG
  6=24-30 AWG
- BARREL I.D.
  N=.044±.001/(1.12±0.03) DIA. 8
  P=.054±.001/(1.37±0.03) DIA. 9
- FORM
  1=CHAIN
  2=LOOSE

THESE TERM'S. MATE WITH (1.14)/.045 ROUND PIN

PART NO.	ENG. NO.	OLD ENG. NO.
02-05-1116	2107-1B6N1	2107-T
02-05-1117	2107-1B6N2	2107-TL
02-05-1104	2107-1B5N1	1929-T
02-05-1105	2107-1B5N2	1929-TL
02-05-3205	2107-2A5N2	2123-L
02-05-1204	2107-2B5N1	2123-T
02-05-1205	2107-2B5N2	2123-TL
02-05-1216	2107-2B6N1	2125-T
02-05-1217	2107-2B6N2	2125-TL
REL. TO MFG.	2107-1E5N1	----------
REL. TO MFG.	2107-1E5N2	----------
REL. TO MFG.	2107-1E6N1	----------
REL. TO MFG.	2107-1E6N2	----------

THESE TERM'S. MATE WITH (1.14)/.045 SQUARE PIN

PART NO.	ENG. NO.	OLD ENG. NO.
02-05-1115	2107-1B6P1	2107-1(P901)
02-05-1119	2107-1B6P2	2107-1(P901)L
02-05-1106	2107-1B5P1	----------
02-05-1107	2107-1B5P2	----------
REL. TO MFG.	2107-1D5P1	----------
REL. TO MFG.	2107-1D5P2	----------
REL. TO MFG.	2107-1G5P1	----------
REL. TO MFG.	2107-1G5P2	----------
REL. TO MFG.	2107-1D6P1	----------
REL. TO MFG.	2107-1D6P2	----------
REL. TO MFG.	2107-2A6P1	----------
REL. TO MFG.	2107-2A6P2	----------
REL. TO MFG.	2107-2A5P1	----------
REL. TO MFG.	2107-2A5P2	----------
02-05-1207	2107-2B5P1	----------
02-05-1208	2107-2B5P2	----------
02-05-5221	2107-2C5P1	----------
REL. TO MFG.	2107-2C5P2	----------
REL. TO MFG.	2107-2B6P1	----------
REL. TO MFG.	2107-2B6P2	----------
02-05-5223	2107-2C6P1	----------
REL. TO MFG.	2107-1E5P1	----------
REL. TO MFG.	2107-1E5P2	----------
REL. TO MFG.	2107-1E6P1	----------
REL. TO MFG.	2107-1E6P2	----------
02-05-5330	2107-2F5P1	----------
REL. TO MFG.	2107-2F5P2	----------
02-05-5332	2107-2F6P1	----------
REL. TO MFG.	2107-2F6P2	----------

NOTES:

1. MATERIALS:
   1= CARTRIDGE BRASS
   2= PHOSPHOR BRONZE
2. FINISHES:
   A= (999) UNPLATED
   B= (P901) HOT TIN DIP .000020/(0.00051) MIN.
   C= (P555) SELECT GOLD PLATE .000015/(0.00038) MIN. IN CONTACT AREA OVER .000030/(0.00076) MIN. NICKEL OVERALL.
   D= (P562) SELECT GOLD PLATE .000020/(0.00051) MIN. IN CONTACT AREA OVER .000030/(0.00076) MIN. NICKEL OVERALL.
   E= (P108) ELECTRO TIN PLATE .000035/(0.00089) MIN. OVER .000020/(0.00051) MIN. COPPER OVERALL.
   F= (P561) SELECT GOLD PLATE .000030/(0.00076) MIN. IN CONTACT AREA OVER .000050/(0.00127) MIN. NICKEL OVERALL.
   G= (P550) SELECT GOLD PLATE .000015/(0.00038) MIN. IN CONTACT AREA OVER .000030/(0.00076) MIN. NICKEL OVERALL WITH .000010/(0.00025) MAX. GOLD FLASH OVERALL.
3. PRODUCT SPECIFICATION: NOT AVAILABLE
4. PACKAGING INFORMATION: NOT AVAILABLE
5. THESE TERMINALS FOR USE WITH .045/(1.14) ROUND AND SQUARE PINS.
6. THESE TERMINALS WILL ACCEPT STRANDED WIRE WITH .031/(0.79) MAX. THICK INSULATION.
7. A 2° MAX. ANGLE IS ALLOWED.
8. MATES WITH .045/(1.14) ROUND PIN.
9. MATES WITH .045/(1.14) SQUARE PIN.
10. WITH TERMINAL CRIMPED TO WIRE, TERMINAL TO WITHSTAND 2.5 POUNDS MINIMUM FORCE WITHOUT FRACTURE WHEN FORCE IS APPLIED IN DIRECTION SHOWN AT A RATE OF 2 IN./MIN.

REVISED/REDRAWN		DESCRIPTION	REV
EC NO: UCP2004-1861	2004/08/06		
DRWN:RHOLTS	2004/08/09		
CHKD:FSMITH	2004/08/09		
APPR:FSMITH	2004/08/10		
AM			

QUALITY SYMBOLS: ▼=0 ▽=0

GENERAL TOLERANCES (UNLESS SPECIFIED)

	mm	INCH
4 PLACES	± ---	± ---
3 PLACES	± ---	± ---
2 PLACES	± ---	± ---
1 PLACE	± ---	± ---
ANGULAR ±---°		

DRAFT WHERE APPLICABLE MUST REMAIN WITHIN DIMENSIONS

SCALE: --- | DESIGN UNITS: INCH | DIMENSION STYLE: IN/MM | THIRD ANGLE PROJECTION | REVISE ON CAD ONLY

DRAWN BY: GEP 1987/09/18
CHECKED BY: RW 1987/09/18
APPROVED BY: RAS 1987/09/18

TITLE: CRIMP TERMINAL, FEMALE FOR .045/(1.14) PINS 18-30 AWG WIRE

MOLEX INCORPORATED

MATERIAL NO.: SEE CHART | DOCUMENT NO.: SD-2107-* | SHEET NO.: 2 OF 2

THIS DRAWING CONTAINS INFORMATION THAT IS PROPRIETARY TO MOLEX INCORPORATED AND SHOULD NOT BE USED WITHOUT WRITTEN PERMISSION C

tb_frame_C_P_ME_T Rev. C 2002/05/05