Excellent Integrated System Limited

Stocking Distributor

Click to view price, real time Inventory, Delivery & Lifecycle Information:

Molex Connector Corporation
0982761005

For any questions, you can email us directly:
sales@integrated-circuit.com

Distributor of Molex Connector Corporation: Excellent Integrated System Limited
Datasheet of 0982761005 - SICMA HYBRID MAL.HSG. BROWN 16CK
Contact us: sales@integrated-circuit.com Website: www.integrated-circuit.com

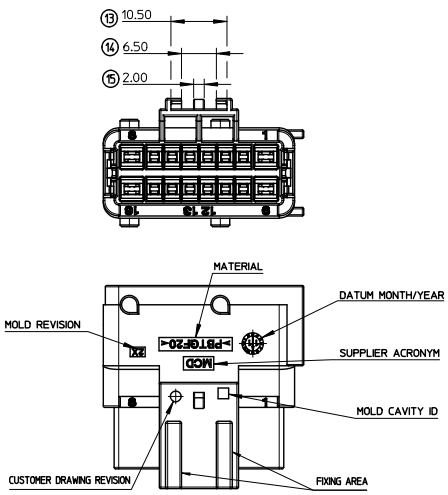

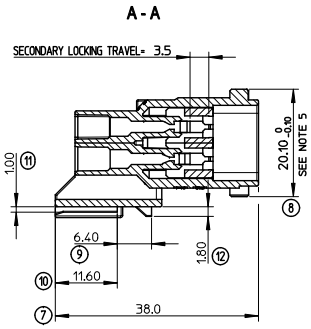

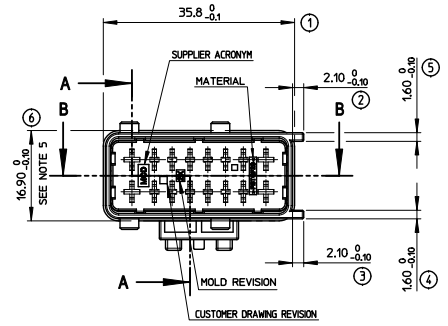

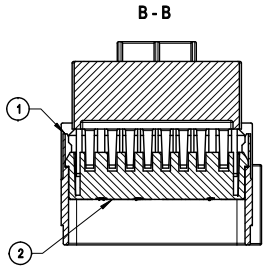

CODINGS

COLOR: BLACK P/N°: 0982761001	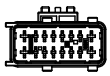
COLOR: GREEN P/N°: 0982761002	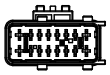
COLOR: BLUE P/N°: 0982761003	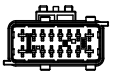
COLOR: WHITE P/N°: 0982761004	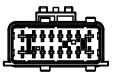
COLOR: BROWN P/N°: 0982761005	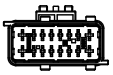
COLOR: GREY P/N°: 0982761006	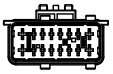

MODIFICATIONS

REV.	DESCRIPTION	NAME	DATE
A	PRELIMINARY ISSUE FOR GENERAL MARKET	EBA	04/11/08
B	MODIFICATION OF SHAPE ON 1,5 TERMINAL'S LATCHES	PKO	07/19/02
C	CHANGE THE SUPLIER OF MATERIAL ON THE MALE BODY	PKO	07/10/23
D	-CODINGS REDRAWN TO BE LINKED WITH 3D MODELS. -ALL MARKINGS UPDATED. -REPAGED. -TEXTS IN FRENCH DELETED. -NOTES UPDATED. -FIXING AREA DEFINED WITH DIMS#9 to 15. -SECTION A-A UPDATED. -DIM#7 MOVED ON SECTION A-A.	GD	12/02/27

NOTES:

1 -FOR ILLUSTRATION PURPOSE THE MALE MODULE SHOWN IS THE BLACK VERSION.

2 -FEMALE CONNECTOR WILL MATE WITH MALE CONNECTOR P/N°: 098273100X.

3 -APPLICATION SPECIFICATION: AS-98276-001.

4 -PACKAGING SPECIFICATION: PK-98276-001.

5 -BOW ALLOWED 0.2 ON EACH SIDE.

6 -TERMINALS TO BE USED ARE SPECIFIED IN APPLICATION SPECIFICATION.

ISO VIEW

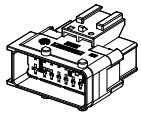

MOLEX P/N°	REP.	DESIGNATION	MATERIAL	COLOUR
0982770001	2	SECONDARY LOCKING	>PBT-GF20<	YELLOW
098276000X	1	MALE BODY	>PBT-GF20<	SEE CHART

REVISED
EC NO: G2012-0136
DRWN:GUESBRUERES 2012/01/18
CHKD:VIOUAS 2012/02/27
APPR:BOUCHAN 2012/04/16
DESCRIPTION
REV D

QUALITY SYMBOLS

GENERAL TOLERANCES (UNLESS SPECIFIED)

	mm	INCH
4 PLACES	± ---	± ---
3 PLACES	± ---	± ---
2 PLACES	± 0.10	± ---
1 PLACE	± 0.2	± ---
ANGULAR ± 1 °		

DRAFT WHERE APPLICABLE MUST REMAIN WITHIN DIMENSIONS

DIMENSION STYLE: MM ONLY
SCALE: 2:1
DESIGN UNITS: METRIC
FIRST ANGLE PROJECTION

DRAWN BY	EBASSET	DATE 2004/11/08
CHECKED BY	EBASSET	DATE 2004/11/08
APPROVED BY	LSTICKEI	DATE 2004/11/08

TITLE: 16W HYB. MALE CONN.

MOLEX INCORPORATED

MATERIAL NO.: SEE CHART
DOCUMENT NO.: SD-98276-001
SHEET NO.: 1 OF 1
SIZE: A2

THIS DRAWING CONTAINS INFORMATION THAT IS PROPRIETARY TO MOLEX INCORPORATED AND SHOULD NOT BE USED WITHOUT WRITTEN PERMISSION

fb_frame_A2_P_AM_F
Rev. D 2004/06/28