Excellent Integrated System Limited

Stocking Distributor

Click to view price, real time Inventory, Delivery & Lifecycle Information:

Molex Connector Corporation
0365100032

For any questions, you can email us directly:
sales@integrated-circuit.com

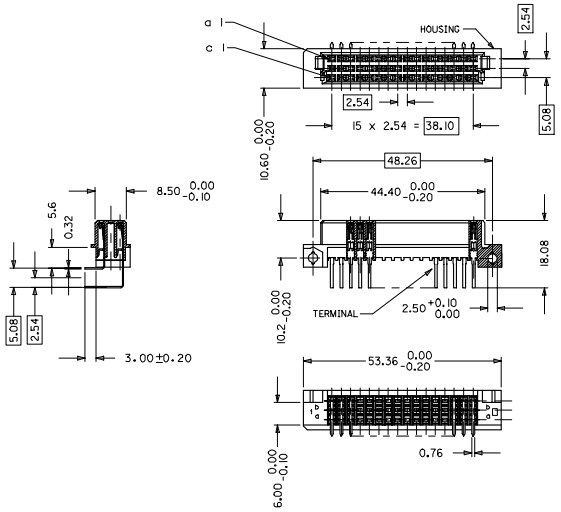

WITH MOUNTING CLIPS

8:1

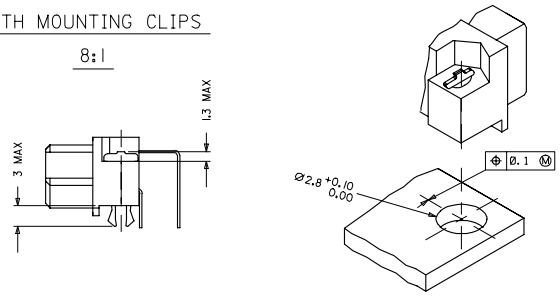

NOTES:
1) MATERIALS: THERMOPLASTIC POLYESTER,GLASS FILLED,
UL94V-0.COLOUR: PEBBLE GREY RAL 7032
TERMINAL - PHOSPHOR BRONZE
MOUNTING CLIP: STEEL
2) FINISH: TERMINAL:-
CONTACT AREA
1. PERFORMANCE LEVEL 1: SELECTIVE GOLD (Au), THICKNESS = 1.1 MICROMETER
OVER NICKEL, THICKNESS = 1.25 MICROMETER
2. PERFORMANCE LEVEL 2: SELECTIVE GOLD (Au), THICKNESS = 0.6 MICROMETER
OVER NICKEL, THICKNESS = 1.25 MICROMETER
3. PERFORMANCE LEVEL 3: SELECTIVE GOLD (Au), THICKNESS = 0.3 MICROMETER
OVER NICKEL, THICKNESS = 1.25 MICROMETER
TERMINATION AREA:
SELECTIVE TIN, THICKNESS =2.5 MICROMETER
OVER NICKEL, THICKNESS = 1.25 MICROMETER OVERALL
3) MOUNTING CLIP:-
TIN (Sn), THICKNESS = 5-10 MICROMETER,
OVER NICKEL (Ni), THICKNESS = 2.5 MICROMETER
4) FOR NON MOUNTING CLIP OPTION, CONNECTOR TO BE SECURED WITH
RIVETS: 2 TUBULAR RIVETS 2.5 x 0.3 ... DIN 7340
SCREWS: 2 CHEESEHEAD SCREWS M2.5 x .... DIN 84 AND 2 HEXAGONAL NUTS M2.5 DIN 934
5) MATERIAL NUMBER, BATCH CODE,UL AND CSA MARKING
TO BE PRINTED ON THE CONNECTOR
6) CUT FACE OF TIP WITHOUT PLATING PERMITTED
7) PRODUCT SPECIFICATION : PS-36509-001

RECOMMENDED PCB LAYOUT
COMPONENT SIDE

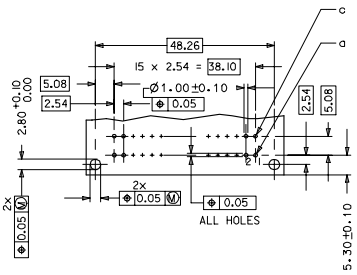

RoHS COMPLIANT

EC NO: I2007-0044	DRWN:SAITTIMARAD 2006/10/18	QUALITY SYMBOLS	GENERAL TOLERANCES (UNLESS SPECIFIED)	DIMENSION STYLE MM ONLY	SCALE 2:1	DESIGN UNITS METRIC	THIRD ANGLE PROJECTION
	CHKD:SSOOHR 2006/10/14	▼=0	mm / INCH	DRAWN BY SS 1999/09/24	TITLE ASSEMBLY, DIN 41612 R/2 FEMALE, 32 POS A+C LOADED		
	APPR:SSOOHR 2006/10/15	▽=0	4 PLACES ± --- / ± ---	CHECKED BY GJLOWE 1999/09/24			
	DESCRIPTION		3 PLACES ± 0.05 / ± ---	APPROVED BY GJLOWE 1999/09/24		MOLEX INCORPORATED	
			2 PLACES ± 0.1 / ± ---	MATERIAL NO. SEE CHART	DOCUMENT NO. SD-36510-002		SHEET NO. 1 OF 2
			1 PLACE ± 0.15 / ± ---				
			ANGULAR ± 2 °				
			DRAFT WHERE APPLICABLE MUST REMAIN WITHIN DIMENSIONS	SIZE A 1	THIS DRAWING CONTAINS INFORMATION THAT IS PROPRIETARY TO MOLEX INCORPORATED AND SHOULD NOT BE USED WITHOUT WRITTEN PERMISSION		
	REV D1						

tb_frame_A1_P_ME_T
Rev. D 2004/04/02

MATERIAL No	MOLEX ENG No	PERF LEVEL	PLATING	CONTACT SEQUENCE/ROW	MOUNTING CLIP	SEALING STRIP
36510-0025	MM-B2400-R483	1	Au+Ni	1.2.3....16 a+c	NO	NO
36510-0026	MM-B2500-R483	2	Au+Ni	1.2.3....16 a+c	NO	NO
36510-0027	MM-B2600-R483	3	Au+Ni	1.2.3....16 a+c	NO	NO
36510-0031	MM-B2400-R413	1	Au+Ni	1.2.3....16 a+c	YES	NO
36510-0032	MM-B2500-R413	2	Au+Ni	1.2.3....16 a+c	YES	NO
36510-0033	MM-B2600-R413	3	Au+Ni	1.2.3....16 a+c	YES	NO
36510-0037	MM-B2400-R483-101	1	Au+Ni	1.2.3....16 a+c	NO	YES
36510-0038	MM-B2500-R483-101	2	Au+Ni	1.2.3....16 a+c	NO	YES
36510-0039	MM-B2600-R483-101	3	Au+Ni	1.2.3....16 a+c	NO	YES
36510-0043	MM-B2400-R413-101	1	Au+Ni	1.2.3....16 a+c	YES	YES
36510-0044	MM-B2500-R413-101	2	Au+Ni	1.2.3....16 a+c	YES	YES
36510-0045	MM-B2600-R413-101	3	Au+Ni	1.2.3....16 a+c	YES	YES

CONNECTOR WITH SEALING STRIP

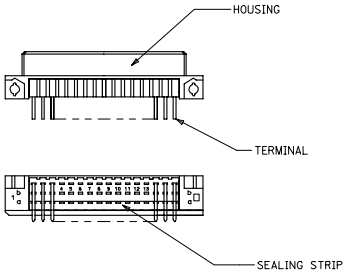

RoHS COMPLIANT

EC NO: I2007-0044
DRWN:SAITTNARAD 2006/10/18
CHKD:SSOORIR 2006/10/19
APPR:SSOORIR 2006/10/19
DESCRIPTION
REV D1

QUALITY SYMBOLS
▼=0
▽=0

GENERAL TOLERANCES (UNLESS SPECIFIED)

	mm	INCH
4 PLACES	± ---	± ---
3 PLACES	± 0.05	± ---
2 PLACES	± 0.1	± ---
1 PLACE	± 0.15	± ---
ANGULAR ± 2 °		

DRAFT WHERE APPLICABLE MUST REMAIN WITHIN DIMENSIONS

DIMENSION STYLE: MM ONLY
DRAWN BY: SS DATE: 1999/09/24
CHECKED BY: GJLOWE DATE: 1999/09/24
APPROVED BY: GJLOWE DATE: 1999/09/24
MATERIAL NO.: SEE CHART
SIZE: A 1

SCALE: 2:1
DESIGN UNITS: METRIC
THIRD ANGLE PROJECTION

TITLE: ASSEMBLY, DIN 41612 R/2 FEMALE, 32 POS A+C LOADED

MOLEX INCORPORATED

DOCUMENT NO.: SD-36510-002
SHEET NO.: 2 OF 2

THIS DRAWING CONTAINS INFORMATION THAT IS PROPRIETARY TO MOLEX INCORPORATED AND SHOULD NOT BE USED WITHOUT WRITTEN PERMISSION

tb_frame_A1_P_ME_T
Rev. D 2004/04/02