Excellent Integrated System Limited

Stocking Distributor

Click to view price, real time Inventory, Delivery & Lifecycle Information:

Texas Instruments
LM95172EWG

For any questions, you can email us directly:
sales@integrated-circuit.com

Distributor of Texas Instruments: Excellent Integrated System Limited
Datasheet of LM95172EWG - SENSOR TEMPERATURE SPI 10CFP
Contact us: sales@integrated-circuit.com Website: www.integrated-circuit.com

LM95172 13-Bit to 16-Bit 200°C Digital Temp Sensor with 3-Wire Interface

Check for Samples: LM95172

FEATURES

- **LM95172EWG is AEC-Q100 Grade 0 Qualified and is Manufactured on an Automotive Grade Flow.**
- **13-Bit (0.0625°C LSB) to 16-Bit (0.0078125°C LSB) Temperature Resolution**
- **Wide −40°C to +200°C Temperature Range**
- **35 ms Best Conversion Time Tracks Fast Temp Changes**
- **$\overline{\text{OVERTEMP}}$ Digital Output Switches when $T_{DIE} > T_{HIGH}$**
- **Shutdown Mode Saves Power yet Wakes up for One-Shot Temperature Update**
- **SPI and MICROWIRE Bus Interface**
- **10-Pin Cerpack High-Temperature Ceramic Package**

APPLICATIONS

- **Automotive High Temperature Applications**
- **Industrial Power Controllers**
- **Industrial Motors, Gear Boxes**
- **Geothermal Instrumentation**
- **High Temperature Test Equipment**

KEY SPECIFICATIONS

- **Analog and Digital Supply Voltage 3.0V to 5.5V**
- **Total Supply Current Operating 400 µA (typ)**
  - **Shutdown −40°C to +140°C 4 µA (max)**
  - **Shutdown −40°C to +175°C 12 µA (max)**
  - **Shutdown −40°C to +200°C 28 µA (max)**
- **Temperature Accuracy**
  - **+175°C to +200°C ±3.0°C (max)**
  - **+130°C to +160°C ±1.0°C (max)**
  - **+120°C to +130°C ±2.0°C (max)**
  - **+160°C to +175°C ±2.0°C (max)**
  - **−40°C to +120°C ±3.5°C (max)**
- **Temperature Resolution**
  - **13-bit mode 0.0625°C/LSB**
  - **16-bit mode 0.0078125°C/LSB**
- **Conversion Time**
  - **13-bit mode 43 ms (max)**
  - **16-bit mode 350 ms (max)**

DESCRIPTION

The LM95172EWG is an integrated digital-output temperature sensor with a Serial Peripheral Interface (SPI) and MICROWIRE™-compatible interface in a 10-pin Cerpack high temperature ceramic package. It features a very linear Sigma-Delta Analog-to-Digital Converter (ADC), high accuracy, fast conversion rates, and extremely low output noise. With an operating temperature as low as -40°C and optimized accuracy from 120°C to 200°C, it is ideal for high-temperature applications.

The over-temperature alarm output ($\overline{\text{OVERTEMP}}$) asserts when the die temperature exceeds a programmed T_{HIGH} limit. The user-programmed T_{LOW} limit creates a temperature-stabilizing hysteresis when the ambient temperature is near the trip point.

The LM95172EWG can be programmed to operate from 13 bits (0.0625°C per LSB) to 16 bits (0.0078125°C per LSB) resolution. The LM95172EWG powers up in 35 ms, the fastest conversion time, with temperature output set at 13-bit resolution. The resolution may then be changed to 14-, 15- or 16-bits. When in the 13-, 14- or 15-bit resolution mode, the least significant bit in the 16-bit temperature register toggles after the completion of each conversion. This bit may be monitored to verify that the conversion is complete.

The high noise immunity of the Serial I/O (SI/O) output makes the LM95172EWG ideal for use in challenging electromagnetic environments.

Connection Diagram

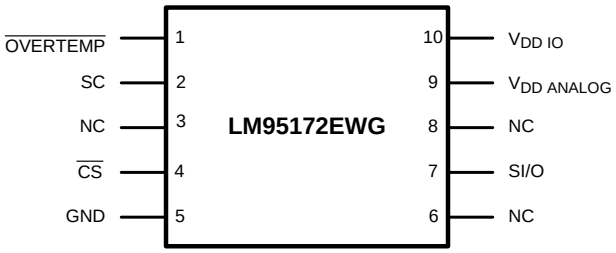

Figure 1. LM95172EWG- Top View

Please be aware that an important notice concerning availability, standard warranty, and use in critical applications of Texas Instruments semiconductor products and disclaimers thereto appears at the end of this data sheet.
All trademarks are the property of their respective owners.

PRODUCTION DATA information is current as of publication date. Products conform to specifications per the terms of the Texas Instruments standard warranty. Production processing does not necessarily include testing of all parameters.

Copyright © 2009–2013, Texas Instruments Incorporated

PIN DESCRIPTIONS

Pin Number	Name	Type	Description	Typical Connection
1	$\overline{\text{OVERTEMP}}$	Output	$\overline{\text{OVERTEMP}}$ Alarm	Over-temperature Alarm Output, Open-drain. Active Low on POR. Requires a pull-up resistor to $V_{DD\ IO}$.
2	SC	Input	Serial Clock input	Serial clock from the Controller
3	NC	N/A	No Connect	Do not connect to this pin.
4	$\overline{\text{CS}}$	Input	Chip Select input	Chip Select input for the bus. Low pass filtered.
5	GND	Ground	Power Supply Ground	Ground
6	NC	N/A	No Connect	Do not connect to this pin.
7	SI/O	Bidirectional	Serial I/O	Serial I/O Data line to or from the Controller
8	NC	N/A	No Connect	Do not connect to this pin.
9	$V_{DD\ ANALOG}$	Power	Analog Power Supply Voltage	DC Voltage from 3.0V to 5.5V. Bypass with a 10 nF ceramic capacitor near the pad to ground.
10	$V_{DD\ IO}$	Power	Digital Power Supply Voltage	DC Voltage from 3.0V to 5.5V. Bypass with a 10 nF ceramic capacitor near the pin to ground.

Simplified Block Diagram

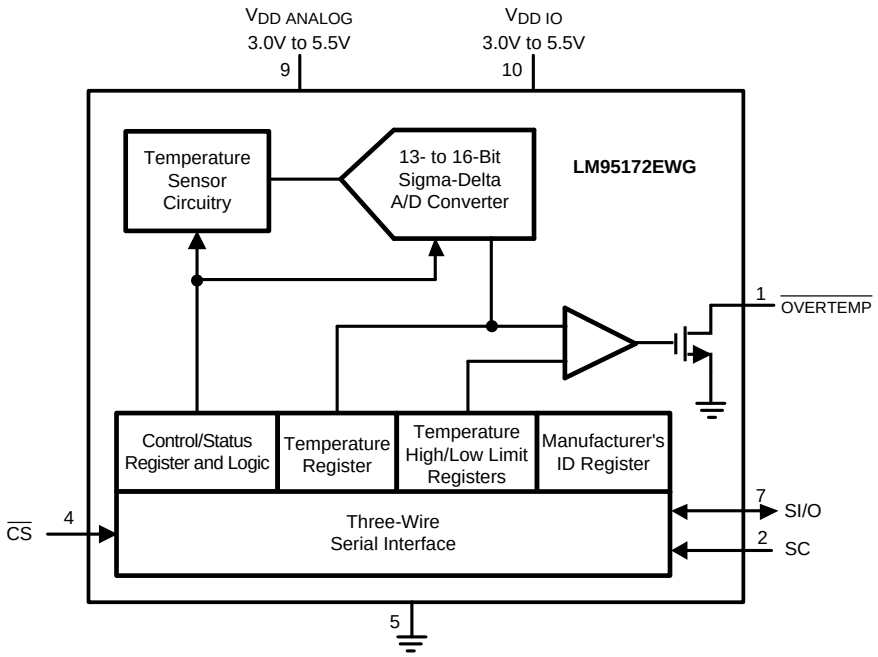

Copyright © 2009–2013, Texas Instruments Incorporated

Distributor of Texas Instruments: Excellent Integrated System Limited
Datasheet of LM95172EWG - SENSOR TEMPERATURE SPI 10CFP
Contact us: sales@integrated-circuit.com Website: www.integrated-circuit.com

Typical Application

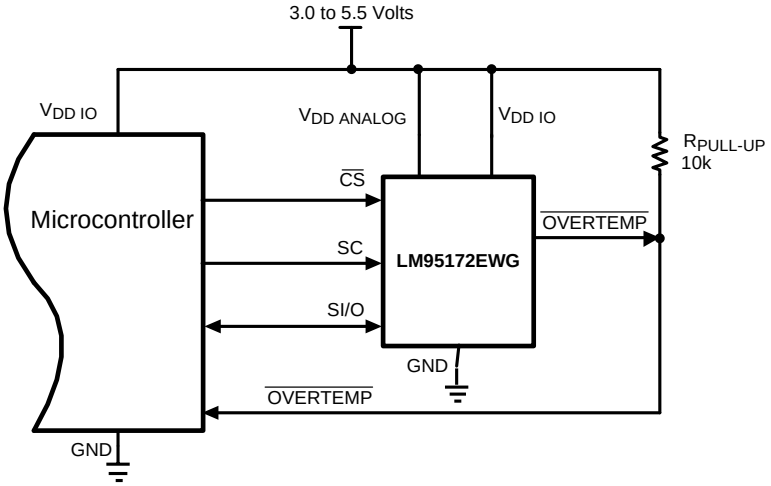

Figure 2. Microcontroller Interface - normal connection

These devices have limited built-in ESD protection. The leads should be shorted together or the device placed in conductive foam during storage or handling to prevent electrostatic damage to the MOS gates.

Absolute Maximum Ratings (1)

$V_{DD\ ANALOG}$ and $V_{DD\ IO}$ Supply Voltages	−0.2V to 6.0V
Voltage at any Pin	−0.2V to ($V_{DD\ IO}$ + 0.2V)
Input Current at any Pin	5 mA
Storage Temperature	−65°C to +175°C
Soldering Information Infrared or Convection (20 sec.)	 235°C
ESD Susceptibility (2) Human Body Model Machine Model Charged Device Model	 2500 V 250 V 1000 V

(1) "Absolute Maximum Ratings" indicate limits beyond which damage to the device may occur, including inoperability and degradation of device reliability and/or performance. Functional operation of the device and/or non-degradation at the Absolute Maximum Ratings or other conditions beyond those indicated in the Operating Ratings is not implied. The Operating Ratings indicate conditions at which the device is functional and the device should not be operated beyond such conditions.
(2) Human body model, 100 pF discharged through a 1.5 kΩ resistor. Machine model, 200 pF discharged directly into each pin. The Charged Device Model (CDM) is a specified circuit characterizing an ESD event that occurs when a device acquires charge through some triboelectric (frictional) or electrostatic induction processes and then abruptly touches a grounded object or surface.

Operating Ratings

Specified Temperature Range	−40°C to +200°C
Analog Supply Voltage Range $V_{DD\ ANALOG}$	+3.0V to +5.5V
Digital Supply Voltage Range $V_{DD\ IO}$	+3.0V to +5.5V

Package Thermal Resistances

Package	θ_{JA}
10-Lead CERPACK	175°C/W

Distributor of Texas Instruments: Excellent Integrated System Limited
Datasheet of LM95172EWG - SENSOR TEMPERATURE SPI 10CFP
Contact us: sales@integrated-circuit.com Website: www.integrated-circuit.com

Temperature-to-Digital Converter Characteristics

Unless otherwise noted, these specifications apply for $V_{DD\ ANALOG}$ = $V_{DD\ IO}$ = 3.0V to 3.6V.[1] **Boldface limits apply for T_A =−40°C to +200°C;** all other limits T_A = 25°C, unless otherwise noted.

Parameter	Conditions		Typical [2]	LM95172EWG Limits [3]	Units (Limit)
Temperature Accuracy [1]	T_A = +175°C to +200°C			**±3.0**	
	T_A = +130°C to +160°C			**±1.0**	°C (max)
	T_A = +120°C to +130°C			**±2.0**	
	T_A = +160°C to +175°C			**±2.0**	
	T_A = −40°C to +120°C			**±3.5**	
Resolution	Res 1 Bit Res 0 Bit 0 0		13 0.0625		Bits °C
	0 1		14 0.03125		Bits °C
	1 0		15 0.015625		Bits °C
	1 1		16 0.0078125		Bits °C
Temperature Conversion Time [4]	For 13 Bits Resolution			**43** [5]	ms (max)
	For 14 Bits Resolution			**87** [5]	
	For 15 Bits Resolution			**175** [5]	
	For 16 BIts Resolution			**350** [5]	
Total Quiescent Current [6]	Bus Inactive Continuous Conversion Mode	T_A = −40°C to 140°C	400	**456**	µA (max)
		T_A = −40°C to 175°C		**510**	
		T_A = −40°C to 200°C	500	**650**	
	Shutdown Mode	T_A = −40°C to 140°C		**4**	
		T_A = −40°C to 175°C		**12**	
		T_A = −40°C to 200°C	28	**75**	
Power-On Reset Threshold	T_A = −40°C to 140°C			**0.9**	V (min)
				2.1	V (max)
	T_A = −40°C to 175°C			**0.8**	V (min)
				2.1	V (max)
	T_A = −40°C to 200°C			**0.3**	V (min)
				2.1	V (max)

(1) The LM95172EWG will operate properly over the $V_{DD\ ANALOG}$ = 3.0V to 5.5V and $V_{DD\ IO}$ = 3.0V to 5.5V supply voltage ranges.
(2) Typical values represent most likely parametric norms at specific conditions (Example Vcc; specific temperature) and at the recommended Operating Conditions at the time of product characterizations and are not ensured.
(3) The Electrical characteristics tables list ensured specifications under the listed Operating Ratings except as otherwise modified or specified by the Electrical Characteristics Conditions and/or Notes. Typical specifications are estimations only and are not ensured.
(4) This specification is provided only to indicate how often temperature data is updated. The LM95172EWG can be read at any time without regard to conversion state (and will yield last conversion result). A conversion in progress will not be interrupted. The output shift register will be updated at the completion of the read and a new conversion restarted.
(5) Specification is ensured by characterization and is not tested in production
(6) Total Quiescent Current includes the sum of the currents into the $V_{DD\ ANALOG}$ and the $V_{DD\ IO}$ pins.

Copyright © 2009–2013, Texas Instruments Incorporated

Logic Electrical Characteristics Digital DC Characteristics

Unless otherwise noted, these specifications apply for $V_{DD\ ANALOG}$ = $V_{DD\ IO}$ = 3.0V to 3.6V. (1). **Boldface limits apply for T_A = -40°C to 200°C;** all other limits T_A = +25°C, unless otherwise noted.

Symbol	Parameter	Conditions	Typical (2)	Limits (3)	Units (Limit)
V_{IH}	Logical "1" Input Voltage			**0.75×$V_{DD\ IO}$**	V (min)
V_{IL}	Logical "0" Input Voltage			**0.25×$V_{DD\ IO}$**	V (max)
V_{HYST}	Digital Input Hysteresis	$V_{DD\ IO}$ = 3.0V	0.63	**0.42**	V (min)
		$V_{DD\ IO}$ = 3.3V	0.79	**0.56**	
		$V_{DD\ IO}$ = 3.6V	0.97	**0.72**	
		$V_{DD\ IO}$ = 4.5V		**0.9**	
		$V_{DD\ IO}$ = 5.0V		**1.0**	
		$V_{DD\ IO}$ = 5.5V		**1.1**	
I_{IH}	Logical “1” Input Leakage Current	V_{IN} = $V_{DD\ IO}$		**1**	µA (max)
I_{IL}	Logical “0” Input Current	V_{IN} = 0V		**−1**	µA (max)
V_{OH}	Output High Voltage	I_{OH} = 100 µA (Source)		**$V_{DD\ IO}$ − 0.2**	V (min)
		I_{OH} = 2 mA (Source)		**$V_{DD\ IO}$ − 0.45**	
V_{OL}	Output Low Voltage	I_{OL} = 100 µA (Sink)		**0.2**	V (max)
		I_{OL} = 2 mA (Sink)		**0.45**	
	$\overline{\text{OVERTEMP}}$ Output Saturation Voltage	I_{OL} = 2 mA (Sink)		**0.45**	V(max)

(1) The LM95172EWG will operate properly over the $V_{DD\ ANALOG}$ = 3.0V to 5.5V and $V_{DD\ IO}$ = 3.0V to 5.5V supply voltage ranges.
(2) Typical values represent most likely parametric norms at specific conditions (Example Vcc; specific temperature) and at the recommended Operating Conditions at the time of product characterizations and are not ensured.
(3) The Electrical characteristics tables list ensured specifications under the listed Operating Ratings except as otherwise modified or specified by the Electrical Characteristics Conditions and/or Notes. Typical specifications are estimations only and are not ensured.

Serial Bus Digital Switching Characteristics

Unless otherwise noted, these specifications apply for $V_{DD\ ANALOG}$ = $V_{DD\ IO}$ = 3.0V to 3.6V (1); C_L (load capacitance) on output lines = 100 pF unless otherwise specified. **Boldface limits apply for T_A = -40°C to 200°C;** all other limits T_A = +25°C, unless otherwise noted.

Symbol	Parameter	Typical (2)	Limits (3)	Units (Limit)
t_1	SC (Serial Clock) Period		**765**	ns (min)
t_2	$\overline{\text{CS}}$ (Chip Select) Low to SC High Set-Up Time (4)(5)		**1.25**	µs (min)
t_3	$\overline{\text{CS}}$ Low to SI/O Output Delay (4)(5)		**1**	µs (max)
t_4	SC Low to SI/O Output Delay		**120**	ns (max)
t_5	$\overline{\text{CS}}$ High to Data Out (SI/O) TRI-STATE		**220**	ns (max)
t_6	SC High to SI/O Input Hold Time		**50**	ns (min)
t_7	SI/O Input to SC High Set-Up Time		**30**	ns (min)
t_8	SC Low to $\overline{\text{CS}}$ High Hold Time		**50**	ns (min)
t_{TA}	Data Turn-Around Time: SI/O input (write to LM95172EWG) to output (read from LM95172EWG)		**130**	ns (max)
t_{BUF}	Bus free time between communications: $\overline{\text{CS}}$ High to $\overline{\text{CS}}$ Low(4)(5)		**5**	µs (min)

(1) The LM95172EWG will operate properly over the $V_{DD\ ANALOG}$ = 3.0V to 5.5V and $V_{DD\ IO}$ = 3.0V to 5.5V supply voltage ranges.
(2) Typical values represent most likely parametric norms at specific conditions (Example Vcc; specific temperature) and at the recommended Operating Conditions at the time of product characterizations and are not ensured.
(3) The Electrical characteristics tables list ensured specifications under the listed Operating Ratings except as otherwise modified or specified by the Electrical Characteristics Conditions and/or Notes. Typical specifications are estimations only and are not ensured.
(4) Specification is ensured by characterization and is not tested in production
(5) Specification is ensured by design and is not tested in production

Copyright © 2009–2013, Texas Instruments Incorporated

Distributor of Texas Instruments: Excellent Integrated System Limited
Datasheet of LM95172EWG - SENSOR TEMPERATURE SPI 10CFP
Contact us: sales@integrated-circuit.com Website: www.integrated-circuit.com

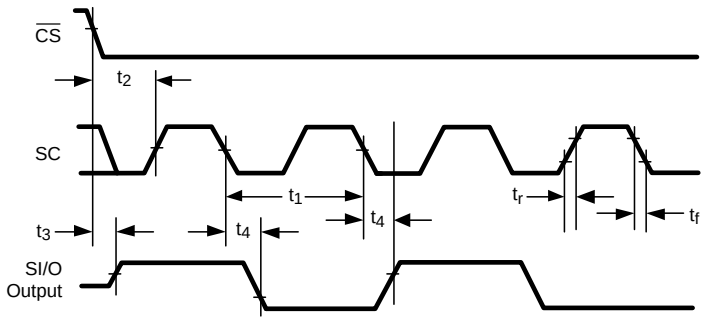

Figure 3. Data Output Timing Diagram

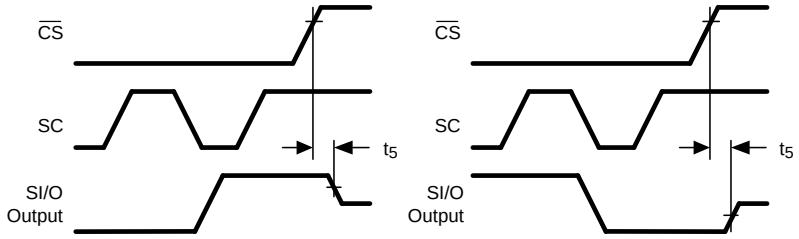

Figure 4. TRI-STATE Data Output Timing Diagram

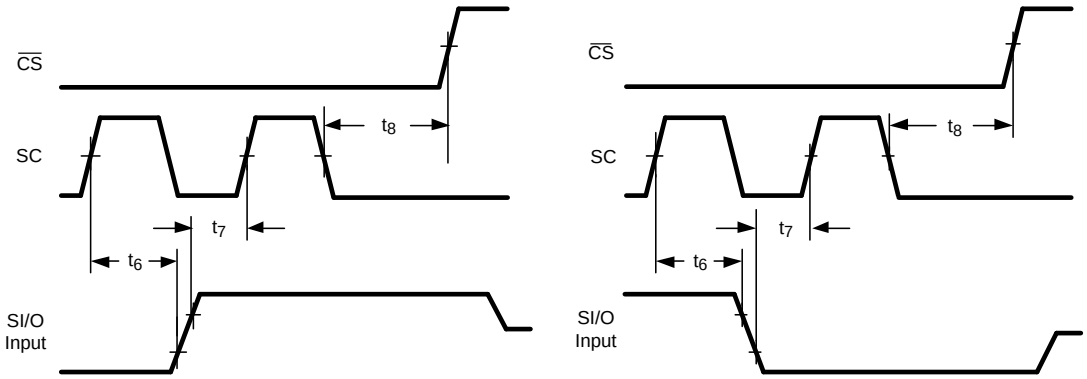

Figure 5. Data Input Timing Diagram

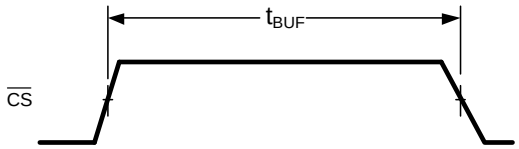

Figure 6. t_{BUF} Timing Definition Diagram

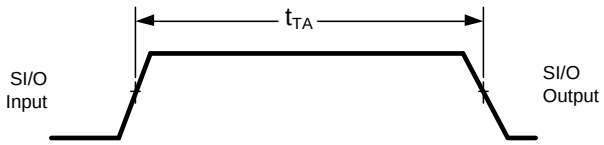

Figure 7. t_{TA} Timing Definition Diagram

Copyright © 2009–2013, Texas Instruments Incorporated

Distributor of Texas Instruments: Excellent Integrated System Limited
Datasheet of LM95172EWG - SENSOR TEMPERATURE SPI 10CFP
Contact us: sales@integrated-circuit.com Website: www.integrated-circuit.com

Figure 8. TRI-STATE Test Circuit

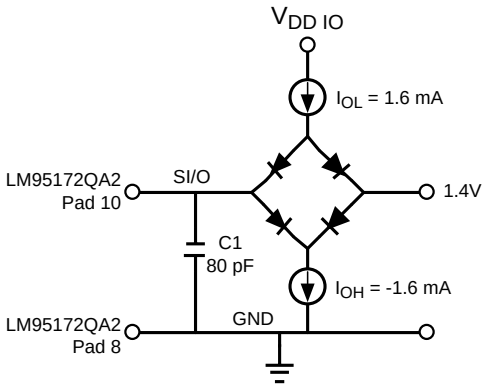

Distributor of Texas Instruments: Excellent Integrated System Limited
Datasheet of LM95172EWG - SENSOR TEMPERATURE SPI 10CFP
Contact us: sales@integrated-circuit.com Website: www.integrated-circuit.com

FUNCTIONAL DESCRIPTION

The LM95172EWG temperature sensor incorporates a temperature sensor and a 13-bit to 16-bit ΣΔ ADC (Sigma-Delta Analog-to-Digital Converter). Compatibility of the LM95172EWG's three wire serial interface with SPI and MICROWIRE allows simple communications with common microcontrollers and processors. Shutdown mode can be used to optimize current drain for different applications. A Manufacturer's/Device ID register identifies the LM95172EWG as Texas Instruments product. See Figure 9.

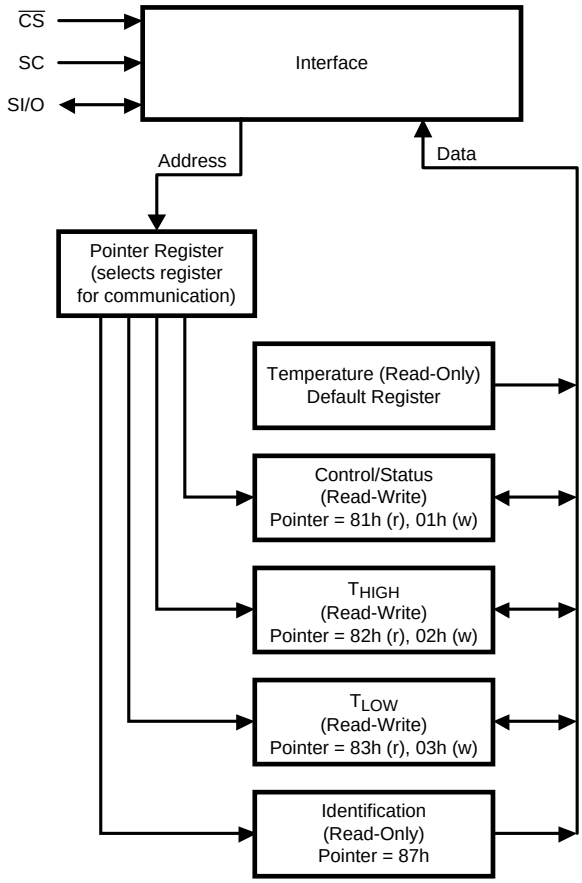

Figure 9. LM95172EWG Functional Block Diagram

INITIAL SOFTWARE RESET AND POWER-UP SEQUENCES AND POWER ON RESET (POR)

Software Reset Sequence

A software reset sequence must be followed, after the initial $V_{DD\ ANALOG}$ and $V_{DD\ IO}$ supply voltages reach their specified minimum operating voltages, in order to ensure proper operation of the LM95172EWG.

The software reset sequence is as follows:

1. Allow $V_{DD\ ANALOG}$ and $V_{DD\ IO}$ to reach their specified minimum operating voltages, as specified in Operating Ratings, and in a manner as specified in Power-Up Sequence.
2. Write a “1” to the Shutdown bit, Bit 15 of the Control/Status Register, and hold it high for at least the specified maximum conversion time for the initial default of 13-bits resolution, in order to ensure that a complete reset operation has occurred. (See the Temperature Conversion Time specifications within Temperature-to-Digital Converter Characteristics.)
3. Write a “0” to the Shutdown bit to restore the LM95172EWG to normal mode.
4. Wait for at least the specified maximum conversion time for the initial default of 13-bits resolution in order to ensure that accurate data appears in the Temperature Register.

 Copyright © 2009–2013, Texas Instruments Incorporated

Power-Up Sequence

WARNING

In all cases listed below the $V_{DD\ ANALOG}$ waveform must not lag the $V_{DD\ IO}$ waveform

Linear Power-up In the case where the $V_{DD\ ANALOG}$ and $V_{DD\ IO}$ voltage-vs.-time function is linear, the specified minimum operating voltage must be reached in 5 ms or less.

Resistor-Capacitor (R-C) Charging Exponential Power-up In the case where the $V_{DD\ ANALOG}$ and $V_{DD\ IO}$ voltage-vs.-time function is as a typical R-C Charging exponential function the time constant must be less than or equal to 1.25 ms.

Other Power-up Functions In the case where the $V_{DD\ ANALOG}$ and $V_{DD\ IO}$ voltage-vs.-time characteristic follows another function the following requirements must be met:

1. The specified minimum operating voltage values for $V_{DD\ ANALOG}$ and $V_{DD\ IO}$ must be reached in 5 ms or less.
2. The slope of the $V_{DD\ ANALOG}$ and $V_{DD\ IO}$ power-up curves must be greater than or equal to 0.7 V/ms at any time before the specified minimum operating voltage is reached.
3. The slope of the $V_{DD\ ANALOG}$ and $V_{DD\ IO}$ power-up curves must not allow ringing such that the voltage is allowed to drop below the specified minimum operating voltage at any time after the specified minimum operating voltage is reached.

Power On Reset (POR)

After the requirements of Software Reset Sequence and Power-Up Sequence are met each register will then contain its defined POR default value. Any of the following actions may cause register values to change from their POR value:

1. The master writes different data to any Read/Write (R/W) bits, or

2. The LM95172EWG is powered down.

The specific POR Value of each register is listed in INTERNAL REGISTER STRUCTURE.

ONE SHOT CONVERSION

The LM95172EWG features a one-shot conversion bit, which is used to initiate a singe conversion and comparison cycle when the LM95172EWG is in shutdown mode. While the LM95172EWG is in shutdown mode, writing a "1" to the One-Shot bit in the Control/Status Register will cause the LM95172EWG to perform a single temperature conversion and update the Temperature Register and the affected status bits. Operating the LM95172EWG in this one-shot mode allows for extremely low average-power comsumption, making it ideal for low-power applications.

When the One-shot bit is set, the LM95172EWG initiates a temperature conversion. After this initiation, but before the completion of the conversion, and resultant register updates, the LM95172EWG is in a "one-shot" state. During this state, the Data Available (DAV) flag in the Control/Status Register is "0" and the Temperature Register contains the value 8000h (-256°C). All other registers contain the data that was present before initiating the one-shot conversion. After the temperature measurement is complete, the DAV flag will be set to "1" and the temperature register will contain the resultant measured temperature.

$\overline{\text{OVERTEMP}}$ OUTPUT

The Over-temperature ($\overline{\text{OVERTEMP}}$) output is a temperature switch signal that indicates when the measured temperature exceeds the T_{HIGH} programmed limit. The programmable T_{HIGH} register sets the high temperature limit and the T_{LOW} register is used to set the hysteresis. The T_{LOW} register also sets the temperature below which the $\overline{\text{OVERTEMP}}$ output resets. The $\overline{\text{OVERTEMP}}$ output of the LM95172EWG behaves as a temperature comparator. The following explains the operation of $\overline{\text{OVERTEMP}}$. Figure 10 illustrates the $\overline{\text{OVERTEMP}}$ output behavior.

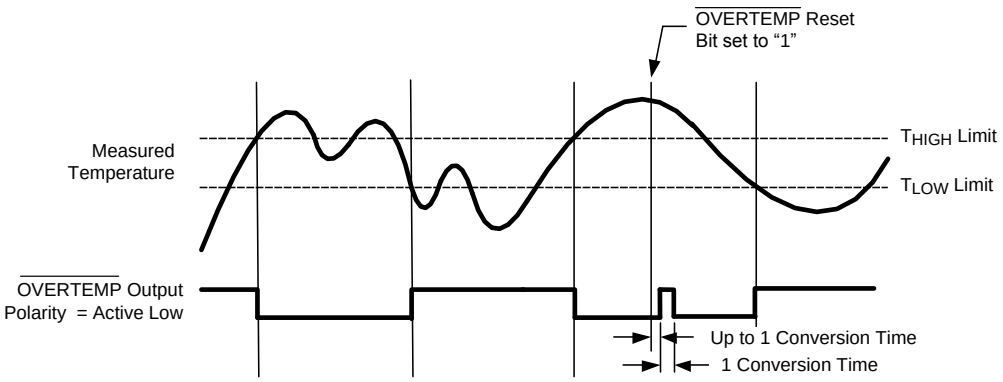

NOTE: The $\overline{\text{OVERTEMP}}$ output asserts when the measured temperature is *greater than* the T_{HIGH} value.

Figure 10. LM95172EWG $\overline{\text{OVERTEMP}}$ vs. Temperature Response Diagram

The $\overline{\text{OVERTEMP}}$ Output will assert when the measured temperature is greater than the T_{HIGH} value. $\overline{\text{OVERTEMP}}$ will reset if any of the following events happen:

1. The temperature falls below the value stored in the T_{LOW} register, or
2. A "1" is written to the $\overline{\text{OVERTEMP}}$ Reset bit in the Control/Status Register.

If $\overline{\text{OVERTEMP}}$ is cleared by the master writing a "1" to the $\overline{\text{OVERTEMP}}$ Reset bit while the measured temperature still exceeds the T_{HIGH} value, $\overline{\text{OVERTEMP}}$ will assert again after the completion of the next temperature conversion. Placing the LM95172EWG in shutdown mode or triggering a one-shot conversion does not cause $\overline{\text{OVERTEMP}}$ to reset.

COMMUNICATING WITH THE LM95172EWG

The serial interface consists of three lines: $\overline{\text{CS}}$ (Chip Select), SC (Serial Clock), and the bi-directional SI/O (Serial I/O) data line. A high-to-low transition of the $\overline{\text{CS}}$ line initiates the communication. The master (processor) always drives the chip select and the clock. The first 16 clocks shift the temperature data out of the LM95172EWG on the SI/O line (a temperature read). Raising the $\overline{\text{CS}}$ at anytime during the communication will terminate this read operation. Following this temperature read, the SI/O line becomes an input and a command byte can be written to the LM95172EWG. This command byte contains a R/$\overline{\text{W}}$ bit and the address of the register to be communicated with next (see INTERNAL REGISTER STRUCTURE). When writing, the data is latched in after every 8 bits. The processor must write at least 8 bits in order to latch the data. If $\overline{\text{CS}}$ is raised before the falling edge of the 8th command bit, no data will be latched into the command byte. If $\overline{\text{CS}}$ is raised after the 8th bit, but before the 16th bit, of a write to a 16-bit data register, only the most significant byte of the data will be latched. This command-data-command-data sequence may be performed as many times as desired.

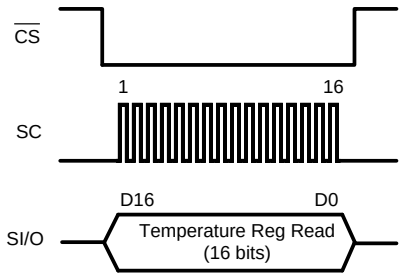

Figure 11. Reading the Temperature Register

Copyright © 2009–2013, Texas Instruments Incorporated

Distributor of Texas Instruments: Excellent Integrated System Limited
Datasheet of LM95172EWG - SENSOR TEMPERATURE SPI 10CFP
Contact us: sales@integrated-circuit.com Website: www.integrated-circuit.com

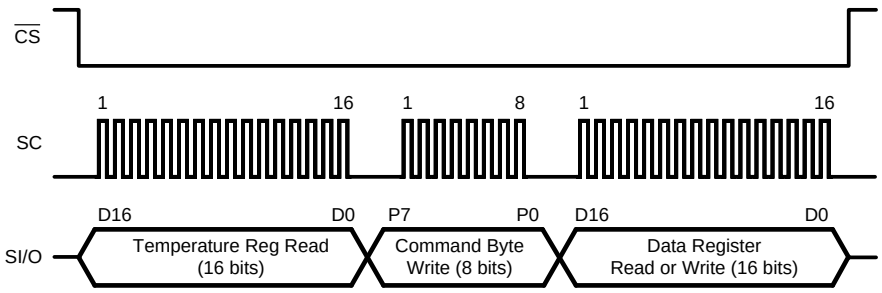

Figure 12. Reading the Temperature Register followed by a read or write from another register (Control/Status, T_{HIGH}, T_{LOW}, or Identification register)

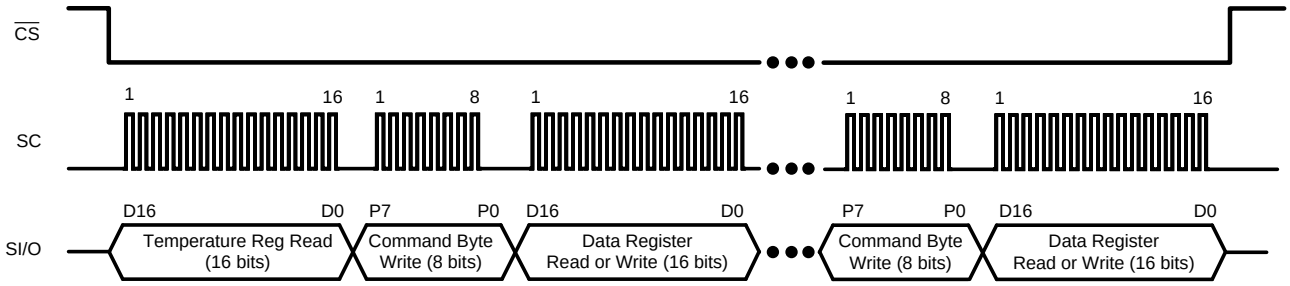

Figure 13. Reading the Temperature Register followed by repeated commands and Data Register accesses (Control/Status, T_{HIGH}, T_{LOW}, or Identification register)

TEMPERATURE DATA FORMAT

Temperature data is represented by a 13- to 16-bit, two's complement word with a Least Significant Bit (LSB) equal to 0.0625 °C (13-bits), 0.03125 °C (14-bits), 0.015625 °C (15-bits) or 0.0078125 °C (16-bits). See Temperature Register for definition of the bits in the Temperature Register.

Table 1. 13-Bit Resolution. First Bit (D15) is Sign, the last bit (D0) is Toggle and bits D1 and D2 are always 0.

Temperature	13-bit Resolution Digital Output		
	16-bit Binary	All 16 Bits	Bits D15 - D3
		Hex	Hex
+175°C	0101011110000 000	5780	0AF0
	0101011110000 001	5781	
+150°C	0100101100000 000	4B00	0960
	0100101100000 001	4B01	
+80°C	0010100000000 000	2800	0500
	0010100000000 001	2801	
+25°C	0000110010000 000	0C80	0190
	0000110010000 001	0C81	
+0.0625°C	0000000000001 000	0008	0001
	0000000000001 001	0009	
0°C	0000000000000 000	0000	0000
	0000000000000 001	0001	
−0.0625°C	1111111111111 000	FFF8	1FFF
	1111111111111 001	FFF9	

Distributor of Texas Instruments: Excellent Integrated System Limited
Datasheet of LM95172EWG - SENSOR TEMPERATURE SPI 10CFP
Contact us: sales@integrated-circuit.com Website: www.integrated-circuit.com

Table 1. 13-Bit Resolution. First Bit (D15) is Sign, the last bit (D0) is Toggle and bits D1 and D2 are always 0. (continued)

Temperature	13-bit Resolution Digital Output		
	16-bit Binary	All 16 Bits	Bits D15 - D3
		Hex	Hex
−40°C	1110110000000 000	EC00	1D80
	1110110000000 001	EC01	

Table 2. 14-Bit Resolution. First bit (D15) is Sign, the last bit (D0) is Toggle and bit D1 is always 0.

Temperature	14-bit Resolution Digital Output		
	16-bit Binary	All 16 Bits	Bits D15 - D2
		Hex	Hex
+175°C	01010111100000 00	5780	15E0
	01010111100000 01	5781	
+150°C	01001011000000 00	4B00	12C0
	01001011000000 01	4B01	
+80°C	00101000000000 00	2800	0A00
	00101000000000 01	2801	
+25°C	00001100100000 00	0C80	0320
	00001100100000 01	0C81	
+0.03125°C	00000000000001 00	0004	0001
	00000000000001 01	0005	
0°C	00000000000000 00	0000	0000
	00000000000000 01	0001	
−0.03125°C	11111111111111 00	FFFC	3FFF
	11111111111111 01	FFFD	
−40°C	11101100000000 00	EC00	3B00
	11101100000000 01	EC01	

Table 3. 15-Bit Resolution. First bit (D15) is Sign and the last bit (D0) is Toggle.

Temperature	15-bit Resolution Digital Output		
	16-bit Binary	All 16 Bits	Bits D15 - D1
		Hex	Hex
+175°C	010101111000000 0	5780	2BC0
	010101111000000 1	5781	
+150°C	010010110000000 0	4B00	2580
	010010110000000 1	4B01	
+80°C	001010000000000 0	2800	1400
	001010000000000 1	2801	
+25°C	000011001000000 0	0C80	0640
	000011001000000 1	0C81	
+0.015625°C	000000000000001 0	0002	0001
	000000000000001 1	0003	
0°C	000000000000000 0	0000	0000
	000000000000000 1	0001	
−0.015625°C	111111111111111 0	FFFE	7FFF
	111111111111111 1	FFFF	
−40°C	111011000000000 0	EC00	7600
	111011000000000 1	EC01	

Copyright © 2009–2013, Texas Instruments Incorporated

Table 4. 16-Bit Resolution. First bit (D15) is Sign and the last bit (D0) is the LSB.

Temperature	16-bit Resolution Digital Output	
	16-bit Binary	All 16 Bits
		Hex
+175°C	0101 0111 1000 0000	5780
+150°C	0100 1011 0000 0000	4B00
+80°C	0010 1000 0000 0000	2800
+25°C	0000 1100 1000 0000	0C80
+0.0078125°C	0000 0000 0000 0001	0001
0°C	0000 0000 0000 0000	0000
−0.0078125°C	1111 1111 1111 1111	FFFF
−40°C	1110 1100 0000 0000	EC00

The first data byte is the most significant byte with most significant bit first, permitting only as much data as necessary to be read to determine temperature condition. For instance, if the first four bits of the temperature data indicate an overtemperature condition, the host processor could immediately take action to remedy the excessive temperatures.

SHUTDOWN MODE

Shutdown Mode is enabled by writing a “1” to the Shutdown Bit, Bit 15 of the Control/Status Register, and holding it high for at least the specified maximum conversion time at the existing temperature resolution setting. (see Temperature Conversion Time specifications under the Temperature-to-Digital Converter Characteristics). For example, if the LM95172EWG is set for 16-bit resolution before shutdown, then Bit 15 of the Control/Status register must go high and stay high for the specified maximum conversion time for 16-bits resolution.

The LM95172EWG will always finish a temperature conversion and update the temperature registers before shutting down.

Writing a “0” to the Shutdown Bit restores the LM95172EWG to normal mode.

INTERNAL REGISTER STRUCTURE

The LM95172EWG has four registers that are accessible by issuing a command byte (a R/$\overline{W}$ Bit plus the register address: Control/Status, T_{HIGH}, T_{LOW}, and Identification. Which of these registers will be read or written is determined by the Command Byte. See COMMUNICATING WITH THE LM95172EWG for a complete description of the serial communication protocol. The following diagram describes the Command Byte and lists the addresses of the various registers. On power-up, the Command Byte will point to the Temperature Register by default. The temperature is read by lowering the $\overline{CS}$ line and then reading the 16-Bit temperature register; all other registers are accessed by writing a Command Byte after reading the temperature.

All registers can be communicated with, either in Continuous Conversion mode or in Shutdown mode. When the LM95172EWG has been placed in Shutdown Mode, the Temperature register will contain the temperature data which resulted from the last temperature conversion (whether it was the result of a continuous-conversion reading or a one-shot reading).

Command Byte

P7	P6	P5	P4	P3	P2	P1	P0
R/$\overline{W}$	0	0	0	0	Register Select		

Bit <7> Read/$\overline{Write}$ Bit. Tells the LM95172EWG if the host will be writing to, or reading from, the register to which this byte is pointing.

Bits <6:3> Not Used. **These Bits must be zero.** If an illegal address is written, the LM95172EWG will return 0000h on the subsequent read.

Bits <2:0> Pointer Address Bits. Points to desired register. See table below.

P2	P1	P0	Register
0	0	0	Invalid. (1)
0	0	1	Control/Status
0	1	0	T_{HIGH}
0	1	1	T_{LOW}
1	0	0	Invalid. (1)
1	0	1	
1	1	0	
1	1	1	Identification

(1) Invalid. The LM95172EWG will return a "0" if read. If written to, no valid register will be modified.

Power-On Reset state: 00h

Reset Conditions: Upon Power-on Reset

Temperature Register

(Read Only): Default Register

D15	D14	D13	D12	D11	D10	D9	D8
Sign	128°C	64°C	32°C	16°C	8°C	4°C	2°C

D7	D6	D5	D4	D3	D2	D1	D0
1°C	0.5°C	0.25°C	0.125°C	0.0625°C	0.03125°C	0.015625°C	Conversion - Toggle/ 0.0078125°C

Bit <15:1>: Temperature Data Byte. Represents the temperature that was measured by the most recent temperature conversion in two's complement form. On power-up, this data is invalid until the DAV Bit in the Control/Status Register is high (that is, after completion of the first conversion).

The resolution is user-programmable from 13-Bit resolution (0.0625°C) through 16-Bit resolution (0.0078125°C). The desired resolution is programmed through Bits 4 and 5 of the Control/Status Register. See the description of Control/Status Register for details on resolution selection.

The Bits not used for a selected resolution are always set to "0" and are not to be considered part of a valid temperature reading. For example, for 14-Bit resolution, Bit <1> is not used and, therefore, it is invalid and is always zero.

Bit <0>: Conversion Toggle or, if 16-Bit resolution has been selected, this is the 16-Bit temperature LSB.

When in 13-Bit, 14-Bit, or 15-Bit resolution mode, this Bit toggles each time the Temperature register is read **if** a conversion has completed since the last read. If conversion has not completed, the value will be the same as the last read.

When in 16-Bit resolution mode, this is the Least Significant Bit of the temperature data.

Reset Conditions: See Software Reset Sequence, Power-Up Sequence, and INITIAL SOFTWARE RESET AND POWER-UP SEQUENCES AND POWER ON RESET (POR) for reset conditions.

One-Shot State: 8000h (-256°C)

Control/Status Register

(Read/Write) Pointer Address: 81h (Read); 01h (Write)

D15	D14	D13	D12	D11	D10	D9	D8
SD	One-Shot	$\overline{\text{OVERTEMP}}$ Reset	Conversion Toggle	$\overline{\text{OVERTEMP}}$ Status	T_{HIGH}	T_{LOW}	DAV

D7	D6	D5	D4	D3	D2	D1	D0
$\overline{\text{OVERTEMP}}$ Disable	$\overline{\text{OVERTEMP}}$ POL	RES1	RES0	0	reserved	reserved	0

Copyright © 2009–2013, Texas Instruments Incorporated

Bit <15>: Shutdown (SD) Bit. Writing a “1” to this bit and holding it high for at least the specified maximum conversion time, at the existing temperature resolution setting, enables the Shutdown Mode. Writing a “0” to this bit restores the LM95172EWG to normal mode.

Bit <14>: One-Shot Bit. When in shutdown mode (Bit <15> is "1"), initiates a single temperature conversion and update of the temperature register with new temperature data. Has no effect when in continuous conversion mode (i.e., when Bit <15> is "0"). Always returns a "0" when read.

Bit <13>: $\overline{\text{OVERTEMP}}$ Reset Bit. Writing a "1" to this Bit resets the $\overline{\text{OVERTEMP}}$ Status bit and, after a possible wait up to one temperature conversion time, the $\overline{\text{OVERTEMP}}$ pin. It will always return a "0" when read.

Bit <12>: Conversion Toggle Bit. Toggles each time the Control/Status register is read **if** a conversion has completed since the last read. If conversion has not been completed, the value will be the same as last read.

Bit <11>: $\overline{\text{OVERTEMP}}$ Status Bit. This Bit is "0" when $\overline{\text{OVERTEMP}}$ output is low and "1" when $\overline{\text{OVERTEMP}}$ output is high. The $\overline{\text{OVERTEMP}}$ output is reset under the following conditions: (1) Cleared by writing a "1" to the $\overline{\text{OVERTEMP}}$ Reset Bit (Bit <13>) in this register or (2) Measured temperature falls below the T_{LOW} limit. If the temperature is still above T_{HIGH}, and $\overline{\text{OVERTEMP}}$ Reset is set to "1", then the Bit and the pin clear until the next conversion, at which point the Bit and pin would assert again.

Bit <10>: Temperature High (T_{HIGH}) Flag Bit. This Bit is set to "1" when the measured temperature exceeds the T_{HIGH} limit stored in the programmable T_{HIGH} register. The flag is reset to "0" when both of two conditions are met: (1) temperature no longer exceeds the programmed T_{HIGH} limit **and** (2) upon reading the Control/Status Register. If the temperature no longer exceeds the T_{HIGH} limit, the status Bit remains set until it is read by the master so that the system can check the history of what caused the $\overline{\text{OVERTEMP}}$ to assert.

Bit <9>: Temperature Low (T_{LOW}) Flag Bit. This Bit is set to "1" when the measured temperature falls below the T_{LOW} limit stored in the programmable T_{LOW} register. The flag is reset to "0" when both of two conditions are met: (1) temperature is no longer below the programmed T_{LOW} limit **and** (2) upon reading the Control/Status Register. If the temperature is no longer below, or equal to, the T_{LOW} limit, the status Bit remains set until it is read by the master so that the system can check the history of what caused the $\overline{\text{OVERTEMP}}$ to assert.

Bit <8>: Data Available (DAV) Status Bit. This Bit is "0" when the temperature sensor is in the process of converting a new temperature. It is "1" when the conversion is done. It is reset after each read and goes high again after one temperature conversion is done. In one-shot mode: after initiating a temperature conversion while operating, this status Bit can be monitored to indicate when the conversion is done. After triggering the one-shot conversion, the data in the temperature register is invalid until this Bit is high (i.e., after completion of the first conversion).

Bit <7>: $\overline{\text{OVERTEMP}}$ Disable Bit. When set to "0" the $\overline{\text{OVERTEMP}}$ output is enabled. When set to "1" the $\overline{\text{OVERTEMP}}$ output is disabled. This Bit also controls the $\overline{\text{OVERTEMP}}$ Status Bit (this register, Bit <11>) since that Bit reflects the state of the $\overline{\text{OVERTEMP}}$ pin.

Bit <6>: $\overline{\text{OVERTEMP}}$ Polarity Bit. When set to "1", $\overline{\text{OVERTEMP}}$ is active-high. When "0" it is active-low.

Control/Status Register (Continued)

Bit <5:4>: Temperature Resolution Bits. Selects one of four user-programmable temperature data resolutions as indicated in the following table.

Control/Status Register		Resolution	
Bit 5	Bit 4	Bits	°C
0	0	13	0.0625
0	1	14	0.03125
1	0	15	0.015625
1	1	16	0.0078125

Bit <3>: Always write a zero to this Bit.

Bit <2:1>: Reserved Bits. Will return whatever was last written to them. Value is zero on power-up.

Bit <0>: Always write a zero to this Bit.

Reset State: 0000h

Reset Conditions: Upon Power-on Reset.

T_{HIGH}: Upper Limit Register

(Read/Write) Pointer Address: 82h (Read); 02h (Write)

D15	D14	D13	D12	D11	D10	D9	D8
Sign	128°C	64°C	32°C	16°C	8°C	4°C	2°C

D7	D6	D5	D4	D3	D2	D1	D0
1°C	0.5°C	0.25°C	Reserved				

Bit <15:5>: Upper-Limit Temperature byte. If the measured temperature, stored in the temperature register, exceeds this user-programmable temperature limit, the $\overline{\text{OVERTEMP}}$ pin will assert and the T_{HIGH} flag in the Control/Status register will be set to "1".

Bit <4:0>: Reserved. Returns all zeroes when read.

Reset State: 4880h (+145°C)

Reset Conditions: Upon Power-on Reset.

T_{LOW}: Lower Limit Register

(Read/Write) Pointer Address: 83h (Read); 03h (Write)

D15	D14	D13	D12	D11	D10	D9	D8
Sign	128°C	64°C	32°C	16°C	8°C	4°C	2°C

D7	D6	D5	D4	D3	D2	D1	D0
1°C	0.5°C	0.25°C	Reserved				

Bit <15:5>: Lower-Limit Temperature byte. If the measured temperature that is stored in the temperature register falls below this user-programmable temperature limit, the $\overline{\text{OVERTEMP}}$ pin will not assert and the T_{LOW} flag in the Control/Status register will be set to "1".

Bit <4:0>: Reserved. Returns all zeroes when read.

Reset State: 4600h (+140°C)

Reset Conditions: Upon Power-on Reset.

MFGID: Manufacturer, Product, and Step ID Register

(Read Only) Pointer Address: 87h

D15	D14	D13	D12	D11	D10	D9	D8
1	0	0	0	0	0	0	0

D7	D6	D5	D4	D3	D2	D1	D0
0	0	1	1	0	0	0	0

Bit <15:8>: Manufacturer Identification Byte. Always returns 80h to uniquely identify the manufacturer as Texas Instruments Corporation.

Bit <7:4>: Product Identification Nibble. Always returns 30h to uniquely identify this part as the LM95172EWG.

Bit <3:0>: Die Revision Nibble. Returns 0h to uniquely identify the revision level as zero.

Reset State: 8030h

Reset Conditions: Upon Power-on Reset.

Copyright © 2009–2013, Texas Instruments Incorporated

Distributor of Texas Instruments: Excellent Integrated System Limited
Datasheet of LM95172EWG - SENSOR TEMPERATURE SPI 10CFP
Contact us: sales@integrated-circuit.com Website: www.integrated-circuit.com

Typical Applications

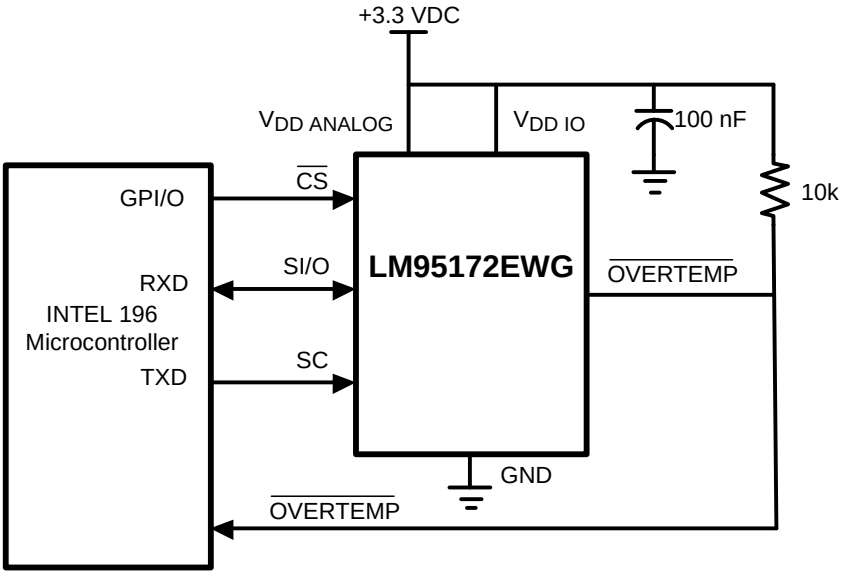

Figure 14. Temperature monitor using Intel 196 processor

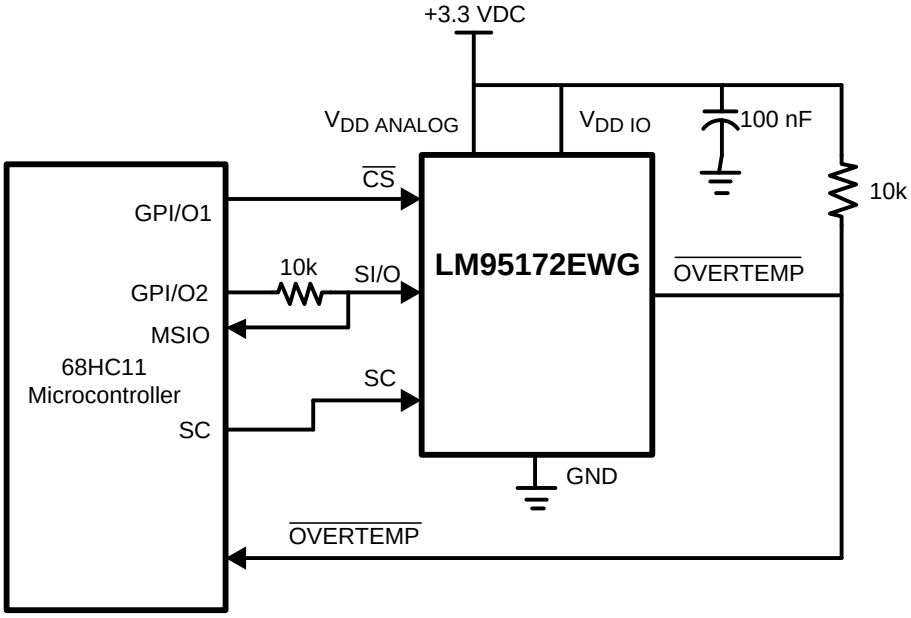

Figure 15. LM95172EWG digital input control using microcontroller's general purpose I/O.

Distributor of Texas Instruments: Excellent Integrated System Limited
Datasheet of LM95172EWG - SENSOR TEMPERATURE SPI 10CFP
Contact us: sales@integrated-circuit.com Website: www.integrated-circuit.com

REVISION HISTORY

Changes from Revision A (March 2013) to Revision B	Page
• Changed layout of National Data Sheet to TI format	17

Copyright © 2009–2013, Texas Instruments Incorporated

Distributor of Texas Instruments: Excellent Integrated System Limited
Datasheet of LM95172EWG - SENSOR TEMPERATURE SPI 10CFP
Contact us: sales@integrated-circuit.com Website: www.integrated-circuit.com

PACKAGE OPTION ADDENDUM

PACKAGING INFORMATION

Orderable Device	Status (1)	Package Type	Package Drawing	Pins	Package Qty	Eco Plan (2)	Lead/Ball Finish (6)	MSL Peak Temp (3)	Op Temp (°C)	Device Marking (4/5)	Samples
LM95172EWG	NRND	CFP	NAC	10		TBD	Call TI	Call TI	-40 to 200	LM95172 EWG	
LM95172EWG/NOPB	ACTIVE	CFP	NAC	10	54	Green (RoHS & no Sb/Br)	A42	Level-1-NA-UNLIM	-40 to 200	LM95172 EWG	Samples

(1) The marketing status values are defined as follows:
ACTIVE: Product device recommended for new designs.
LIFEBUY: TI has announced that the device will be discontinued, and a lifetime-buy period is in effect.
NRND: Not recommended for new designs. Device is in production to support existing customers, but TI does not recommend using this part in a new design.
PREVIEW: Device has been announced but is not in production. Samples may or may not be available.
OBSOLETE: TI has discontinued the production of the device.

(2) Eco Plan - The planned eco-friendly classification: Pb-Free (RoHS), Pb-Free (RoHS Exempt), or Green (RoHS & no Sb/Br) - please check http://www.ti.com/productcontent for the latest availability information and additional product content details.
TBD: The Pb-Free/Green conversion plan has not been defined.
Pb-Free (RoHS): TI's terms "Lead-Free" or "Pb-Free" mean semiconductor products that are compatible with the current RoHS requirements for all 6 substances, including the requirement that lead not exceed 0.1% by weight in homogeneous materials. Where designed to be soldered at high temperatures, TI Pb-Free products are suitable for use in specified lead-free processes.
Pb-Free (RoHS Exempt): This component has a RoHS exemption for either 1) lead-based flip-chip solder bumps used between the die and package, or 2) lead-based die adhesive used between the die and leadframe. The component is otherwise considered Pb-Free (RoHS compatible) as defined above.
Green (RoHS & no Sb/Br): TI defines "Green" to mean Pb-Free (RoHS compatible), and free of Bromine (Br) and Antimony (Sb) based flame retardants (Br or Sb do not exceed 0.1% by weight in homogeneous material)

(3) MSL, Peak Temp. - The Moisture Sensitivity Level rating according to the JEDEC industry standard classifications, and peak solder temperature.

(4) There may be additional marking, which relates to the logo, the lot trace code information, or the environmental category on the device.

(5) Multiple Device Markings will be inside parentheses. Only one Device Marking contained in parentheses and separated by a "~" will appear on a device. If a line is indented then it is a continuation of the previous line and the two combined represent the entire Device Marking for that device.

(6) Lead/Ball Finish - Orderable Devices may have multiple material finish options. Finish options are separated by a vertical ruled line. Lead/Ball Finish values may wrap to two lines if the finish value exceeds the maximum column width.

Important Information and Disclaimer: The information provided on this page represents TI's knowledge and belief as of the date that it is provided. TI bases its knowledge and belief on information provided by third parties, and makes no representation or warranty as to the accuracy of such information. Efforts are underway to better integrate information from third parties. TI has taken and continues to take reasonable steps to provide representative and accurate information but may not have conducted destructive testing or chemical analysis on incoming materials and chemicals. TI and TI suppliers consider certain information to be proprietary, and thus CAS numbers and other limited information may not be available for release.

Distributor of Texas Instruments: Excellent Integrated System Limited
Datasheet of LM95172EWG - SENSOR TEMPERATURE SPI 10CFP
Contact us: sales@integrated-circuit.com Website: www.integrated-circuit.com

In no event shall TI's liability arising out of such information exceed the total purchase price of the TI part(s) at issue in this document sold by TI to Customer on an annual basis.

MECHANICAL DATA

NAC0010A

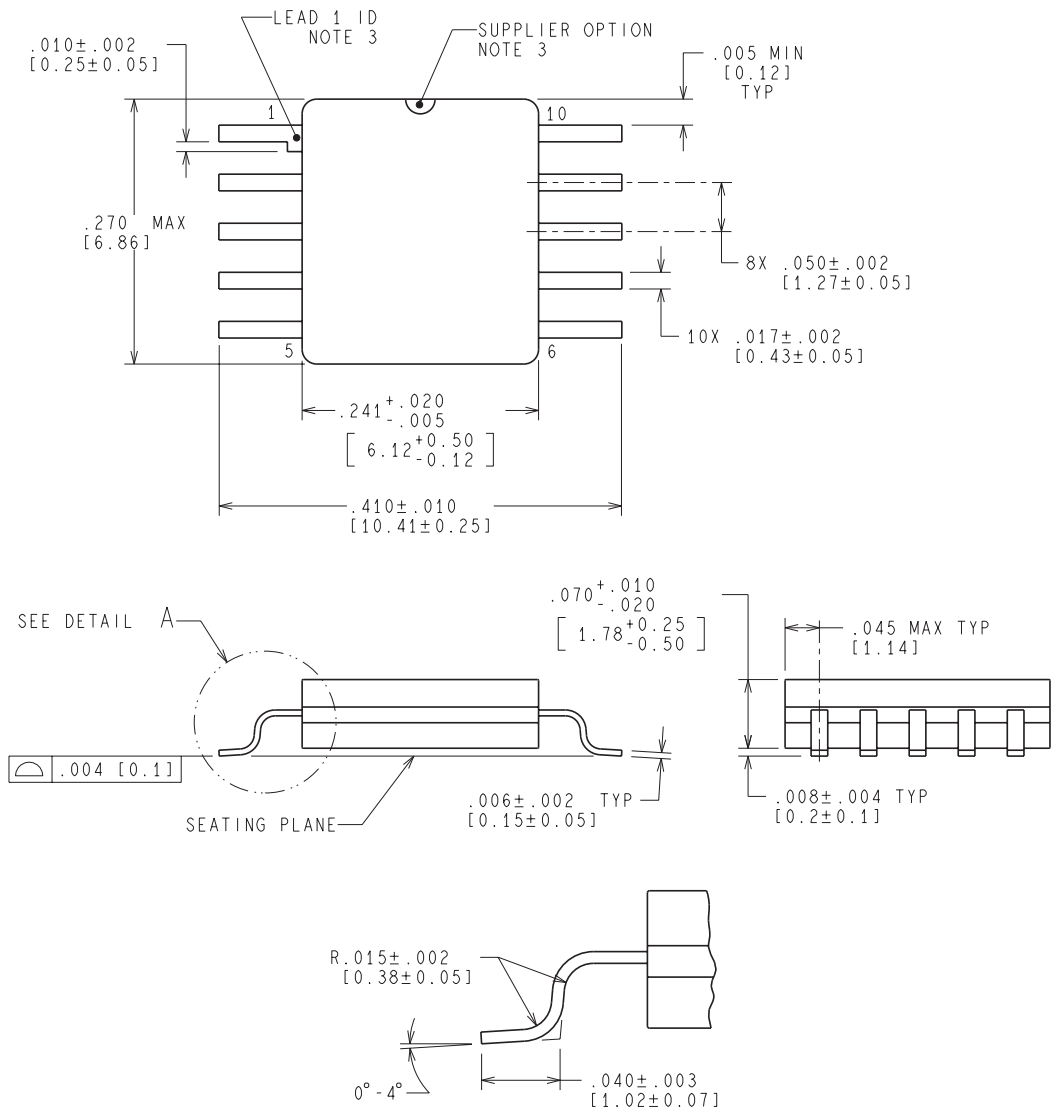

MIL-PRF-38535
CONFIGURATION CONTROL

DETAIL A
TYPICAL

WG10A (Rev H)

IMPORTANT NOTICE

Texas Instruments Incorporated and its subsidiaries (TI) reserve the right to make corrections, enhancements, improvements and other changes to its semiconductor products and services per JESD46, latest issue, and to discontinue any product or service per JESD48, latest issue. Buyers should obtain the latest relevant information before placing orders and should verify that such information is current and complete. All semiconductor products (also referred to herein as “components”) are sold subject to TI’s terms and conditions of sale supplied at the time of order acknowledgment.

TI warrants performance of its components to the specifications applicable at the time of sale, in accordance with the warranty in TI’s terms and conditions of sale of semiconductor products. Testing and other quality control techniques are used to the extent TI deems necessary to support this warranty. Except where mandated by applicable law, testing of all parameters of each component is not necessarily performed.

TI assumes no liability for applications assistance or the design of Buyers’ products. Buyers are responsible for their products and applications using TI components. To minimize the risks associated with Buyers’ products and applications, Buyers should provide adequate design and operating safeguards.

TI does not warrant or represent that any license, either express or implied, is granted under any patent right, copyright, mask work right, or other intellectual property right relating to any combination, machine, or process in which TI components or services are used. Information published by TI regarding third-party products or services does not constitute a license to use such products or services or a warranty or endorsement thereof. Use of such information may require a license from a third party under the patents or other intellectual property of the third party, or a license from TI under the patents or other intellectual property of TI.

Reproduction of significant portions of TI information in TI data books or data sheets is permissible only if reproduction is without alteration and is accompanied by all associated warranties, conditions, limitations, and notices. TI is not responsible or liable for such altered documentation. Information of third parties may be subject to additional restrictions.

Resale of TI components or services with statements different from or beyond the parameters stated by TI for that component or service voids all express and any implied warranties for the associated TI component or service and is an unfair and deceptive business practice. TI is not responsible or liable for any such statements.

Buyer acknowledges and agrees that it is solely responsible for compliance with all legal, regulatory and safety-related requirements concerning its products, and any use of TI components in its applications, notwithstanding any applications-related information or support that may be provided by TI. Buyer represents and agrees that it has all the necessary expertise to create and implement safeguards which anticipate dangerous consequences of failures, monitor failures and their consequences, lessen the likelihood of failures that might cause harm and take appropriate remedial actions. Buyer will fully indemnify TI and its representatives against any damages arising out of the use of any TI components in safety-critical applications.

In some cases, TI components may be promoted specifically to facilitate safety-related applications. With such components, TI’s goal is to help enable customers to design and create their own end-product solutions that meet applicable functional safety standards and requirements. Nonetheless, such components are subject to these terms.

No TI components are authorized for use in FDA Class III (or similar life-critical medical equipment) unless authorized officers of the parties have executed a special agreement specifically governing such use.

Only those TI components which TI has specifically designated as military grade or “enhanced plastic” are designed and intended for use in military/aerospace applications or environments. Buyer acknowledges and agrees that any military or aerospace use of TI components which have ***not*** been so designated is solely at the Buyer's risk, and that Buyer is solely responsible for compliance with all legal and regulatory requirements in connection with such use.

TI has specifically designated certain components as meeting ISO/TS16949 requirements, mainly for automotive use. In any case of use of non-designated products, TI will not be responsible for any failure to meet ISO/TS16949.

Products		**Applications**	
Audio	www.ti.com/audio	Automotive and Transportation	www.ti.com/automotive
Amplifiers	amplifier.ti.com	Communications and Telecom	www.ti.com/communications
Data Converters	dataconverter.ti.com	Computers and Peripherals	www.ti.com/computers
DLP® Products	www.dlp.com	Consumer Electronics	www.ti.com/consumer-apps
DSP	dsp.ti.com	Energy and Lighting	www.ti.com/energy
Clocks and Timers	www.ti.com/clocks	Industrial	www.ti.com/industrial
Interface	interface.ti.com	Medical	www.ti.com/medical
Logic	logic.ti.com	Security	www.ti.com/security
Power Mgmt	power.ti.com	Space, Avionics and Defense	www.ti.com/space-avionics-defense
Microcontrollers	microcontroller.ti.com	Video and Imaging	www.ti.com/video
RFID	www.ti-rfid.com		
OMAP Applications Processors	www.ti.com/omap	**TI E2E Community**	e2e.ti.com
Wireless Connectivity	www.ti.com/wirelessconnectivity		

Mailing Address: Texas Instruments, Post Office Box 655303, Dallas, Texas 75265
Copyright © 2015, Texas Instruments Incorporated