Excellent Integrated System Limited

Stocking Distributor

Click to view price, real time Inventory, Delivery & Lifecycle Information:

FCI
10073379-001LF

For any questions, you can email us directly:
sales@integrated-circuit.com

Distributor of FCI: Excellent Integrated System Limited
Datasheet of 10073379-001LF - PWR 2X2 HDR
Contact us: sales@integrated-circuit.com Website: www.integrated-circuit.com

PRODUCT NUMBER	CONTACT PLATING NOTE
10073379-001LF	NOTE 2

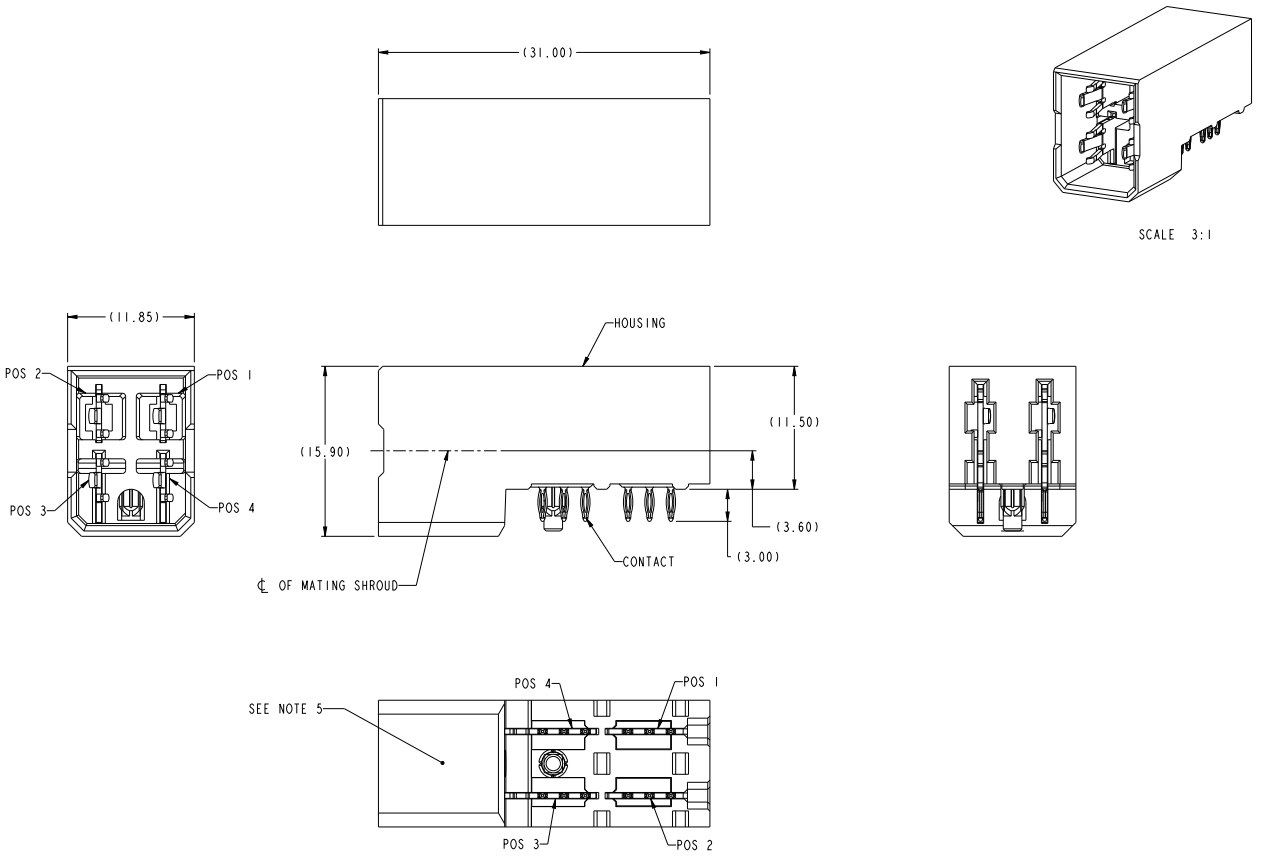

spec ref	GS-12-220	dr	Chen-Hong Tan	2007/01/09	projection	MM	size A2	scale 4:1
tolerance std ASME Y14.5	TOLERANCES UNLESS OTHERWISE SPECIFIED	eng	Suzie Nah	2014/07/14			ecn no	61.R-S-18277-1
		chr	-	-				
		appr	Chen-Hong Tan	2014/08/20	product family	2mm High Power	rel level	Released
surface ASME Y14.5	linear 0.X ±0.3; 0.XX ±0.10; 0.XXX ±0.050; angular 0° ±2°	FCI www.fci.com	title R/A HEADER ASSY 2X2 AIRMAX POWER 11.5MM HEIGHT		dwg no 10073379		rev F	
			cat. no. -		Product - Customer Drw		sheet 1 of 2	

Copyright FCI.

Distributor of FCI: Excellent Integrated System Limited
Datasheet of 10073379-001LF - PWR 2X2 HDR
Contact us: sales@integrated-circuit.com Website: www.integrated-circuit.com

TABLE I
PLATED THROUGH-HOLE REQUIREMENTS

TOP LAYER DESCRIPTION	DRILLED HOLE DIAMETER	COPPER THICKNESS	TIN-LEAD THICKNESS	NICKEL THICKNESS	GOLD THICKNESS	TIN THICKNESS	SILVER THICKNESS	FINISHED HOLE DIAMETER (DIM"A")
TIN-LEAD	0.81-0.86 (0.85 DRILL)	0.025 - 0.050	0.005 - 0.015	--	--	--	--	0.65 - 0.80
IMMERSION TIN	0.81-0.86 (0.85 DRILL)	0.025 - 0.050	--	--	--	0.9 - 1.5um	--	0.70 - 0.80
IMMERSION SILVER	0.81-0.86 (0.85 DRILL)	0.025 - 0.050	--	--	--	--	0.15 - 0.65um	0.70 - 0.80
COPPER (SEE NOTE 11)	0.81-0.86 (0.85 DRILL)	0.025 - 0.050	--	--	--	--	--	0.70 - 0.80
GOLD	0.81-0.86 (0.85 DRILL)	0.025 - 0.050	--	0.003 - 0.007	FLASH UP TO 0.0002	--	--	0.69 - 0.80

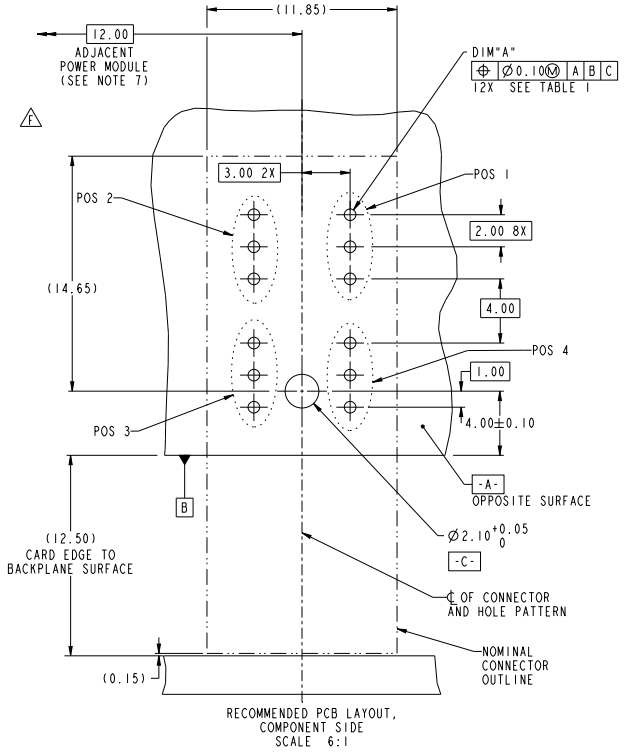

NOTES:

1. CONNECTOR MATERIALS:
   HOUSING: HIGH TEMPERATURE THERMOPLASTIC, BLACK UL 94V-0 COMPLIANT
   CONTACT: HIGH PERFORMANCE COPPER ALLOY
2. CONTACT PLATING:
   PRESS-FIT TAIL: 0.5um MIN MATT TIN OVER NICKEL.
   SEPARABLE INTERFACE: 0.76um MIN GXT OVER NICKEL
3. PRODUCT SPECIFICATION: GS-12-220
4. APPLICATION SPECIFICATION: GS-20-023
5. PRODUCT MARKING (PRODUCT NUMBER & LOT CODE) ON HOUSING.
6. MINIMUM NOMINAL PCB THICKNESS: 1.6mm
7. REFER TO CUSTOMER DRAWING 1003591I FOR INFORMATION REGARDING PCB LAYOUT OF POWER AND GUIDE MODULES RELATIVE TO SIGNAL MODULES.
8. PRODUCT MEETS EUROPEAN UNION DIRECTIVES AND OTHER COUNTRY REGULATIONS AS DESCRIBED IN FCI SPECIFICATION GS-22-008.
9. PACKAGING MEETS FCI SPECIFICATION GS-14-920.
10. HOUSING COMPONENT WILL WITHSTAND EXPOSURE TO 260°C PEAK TEMPERATURE FOR 60 SECONDS IN A CONVECTION, INFRA-RED, OR VAPOR PHASE REFLOW OVEN.
11. COPPER PLATING THICKNESS IN CENTER OF VIA-HOLE CAN BE NO MORE THAN 0.003 LESS THAN OTHER AREAS.
12. A △ SYMBOL WILL BE NEXT TO ANY DIMENSION, VIEW, OR NOTE WHICH HAS BEEN MODIFIED WITH THE CURRENT DRAWING REVISION

spec ref	GS-12-220	dr	Chen-Hong Tan	2007051109	projection	MM	size A2 / scale 1:1
tolerance std ASME Y14.5	TOLERANCES UNLESS OTHERWISE SPECIFIED	eng	Guoie Nath	2010070114			ecn no SLS-S-13077-1
		chr	-	-			ref level Released
		appr	Chen-Hong Tan	2010080205	product family -		
surface - ASME Y14.5	linear: 0.X ±0.3; 0.XX ±0.10; 0.XXX ±0.050; angular 0° ±2°	www.fci.com	title R/A HEADER ASSY 2X2 AIRMAX POWER 11.5MM HEIGHT		dwg no 10073379		rev F
			cat. no. -		Product - Customer Drw		sheet 2 of 2

Copyright FCI.