Excellent Integrated System Limited

Stocking Distributor

Click to view price, real time Inventory, Delivery & Lifecycle Information:

FCI
HM2P40PDE120N9LF

For any questions, you can email us directly:
sales@integrated-circuit.com

LOADING PATTERN MATING SIDE

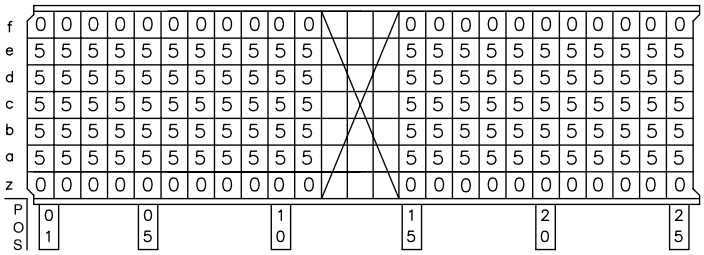

LOADED CONNECTOR ASSEMBLY
(FOR EXAMPLE)

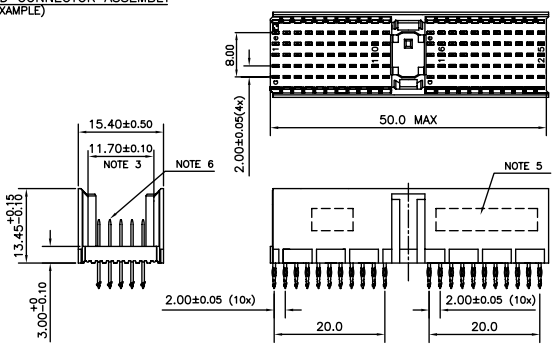

CONTACT OVERVIEW

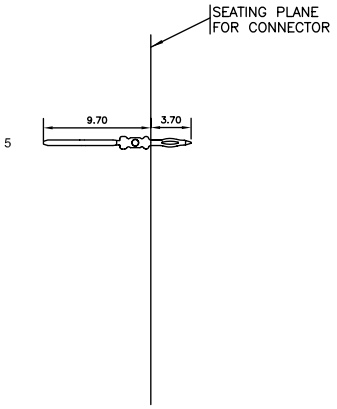

LAY-OUT P.C.B.-HOLE

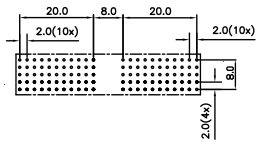

HM2P40PDE120--
- LEAD FREE INDICATOR : LF = LEAD FREE (DIGIT 15 & 16)
- PLATING CODE (DIGIT 13 AND 14) (REF DRW NO. BS,C , 201844 , 003)

NOTES

1. THIS PRODUCT IS CSA APPROVED.
2. THIS PRODUCT IS UL RECOGNIZED.
3. MEASURED AT THE BOTTOM.
4. MATERIAL CONTACT: PHOSPHORBRONZE
   HOUSING: CREAM WHITE GLASS FILLED POLYESTER UL-94V0
5. CONNECTOR PRINTED WITH P/N AND DATE CODE.
6. FOR ACTUAL CONTACT LOADINGS, SEE LOADING PATTERN MATING SIDE.
7. SHAPE OF CONNECTOR HOUSING CAN ALTER DEPENDING ON PRODUCTION LOCATION
8. THE PRODUCT (LF) MEETS EUROPEAN UNION DIRECTIVES AND OTHER COUNTRY REGULATIONS AS DESCRIBED IN GS-22-008
9. FOR RECOMMENDED PTH DIMENSIONS REFER DRAWING : BS, A , 201572 , 001

CATALOG NO: HM2P40PDE120----

ltr	ecn no	dr	date
A	109-0082	GT	2009-05-19

dr	GEORGE THOMAS	2009-05-19	
engr	ALEX BABU	2009-05-19	
chr	ALEX BABU	2009-05-19	
appd	ALEX BABU	2009-05-19	

mat'l. code: SEE NOTE 4
surface: ISO 1302
tolerance: ISO 406 ISO 1101
tolerances unless otherwise specified: angles 0°±1°; linear .0±0.2, .00±0.1
projection
MM
scale –
product family: MILLIPACS
title: MPACS 5+2R STR HDR PF CONN TYPE A NO PEG
dwg no: BS, C ,203028, 862
sheet 1 of 1
size: A3
type: Product Customer Drawing
sheet index | revision sheet: A 1

form: A3

PDM: Rev:A STATUS: **Released** Printed: May 26, 2009

Copyright FCI
FCIconnect.com