Excellent Integrated System Limited

Stocking Distributor

Click to view price, real time Inventory, Delivery & Lifecycle Information:

FCI
65076-001LF

For any questions, you can email us directly:
sales@integrated-circuit.com

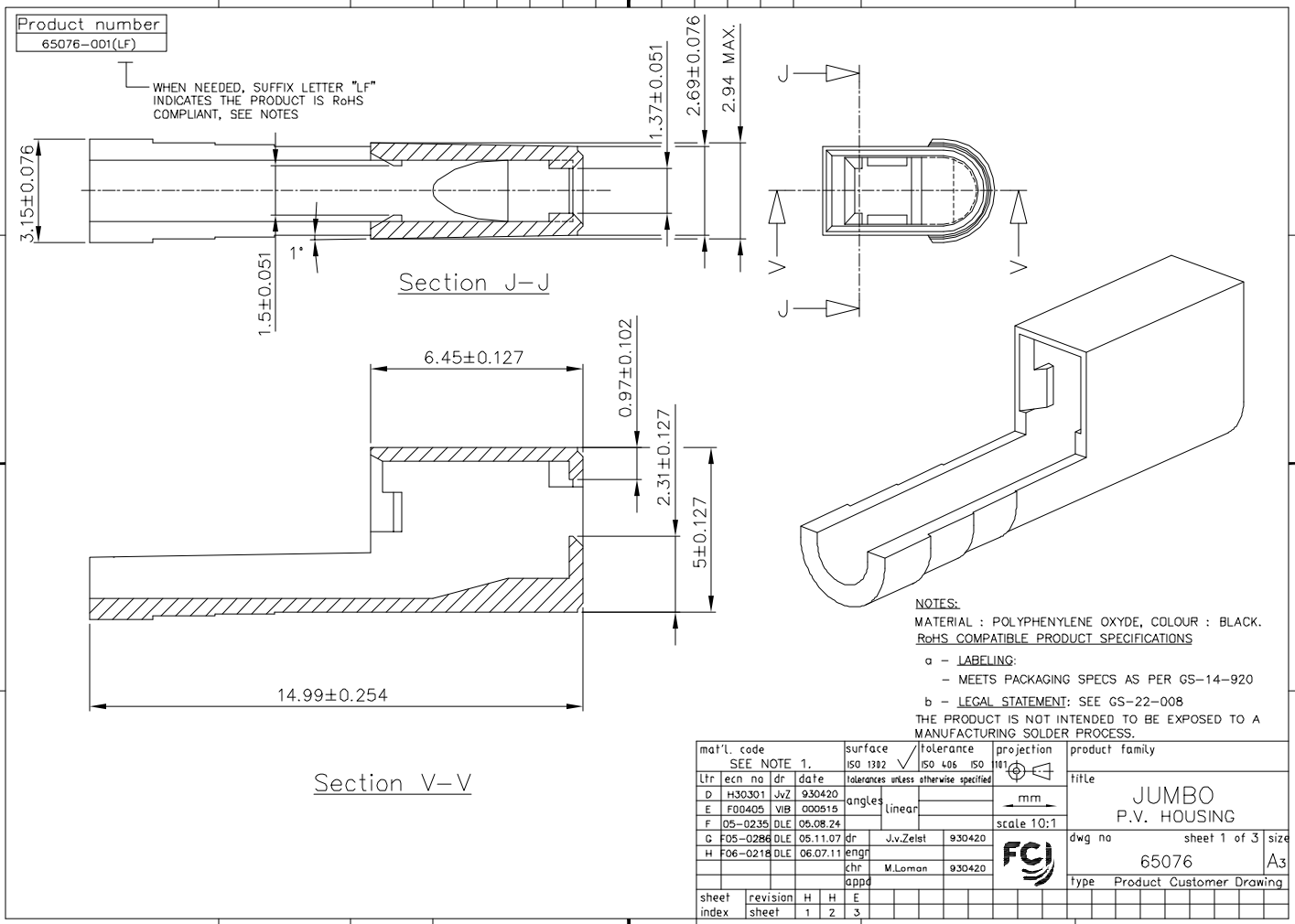

NOTES:
MATERIAL : POLYPHENYLENE OXYDE, COLOUR : BLACK.
RoHS COMPATIBLE PRODUCT SPECIFICATIONS
a – LABELING:
– MEETS PACKAGING SPECS AS PER GS-14-920
b – LEGAL STATEMENT: SEE GS-22-008
THE PRODUCT IS NOT INTENDED TO BE EXPOSED TO A MANUFACTURING SOLDER PROCESS.

mat'l. code				surface	tolerance	projection	product family
SEE NOTE 1.				ISO 1302	ISO 406 ISO 101		
Ltr	ecn no	dr	date	tolerances unless otherwise specified			title
D	H30301	JvZ	930420	angles	linear	mm	JUMBO P.V. HOUSING
E	F00405	VIB	000515				
F	05-0235	DLE	05.08.24			scale 10:1	
G	F05-0286	DLE	05.11.07	dr	J.v.Zelst 930420		dwg no 65076 — sheet 1 of 3 — size A3
H	F06-0218	DLE	06.07.11	engr			
				chr	M.Loman 930420		
				appd			type Product Customer Drawing

sheet index	revision	H	H	E
	sheet	1	2	3

form: A3

Copyright FCI
FCIconnect.com

PDM: Rev:H STATUS:Released Printed: Jun 06, 2009

Product number
65076-002LF

WHEN NEEDED, SUFFIX LETTER "LF" INDICATES THE PRODUCT IS RoHS COMPLIANT, SEE NOTES

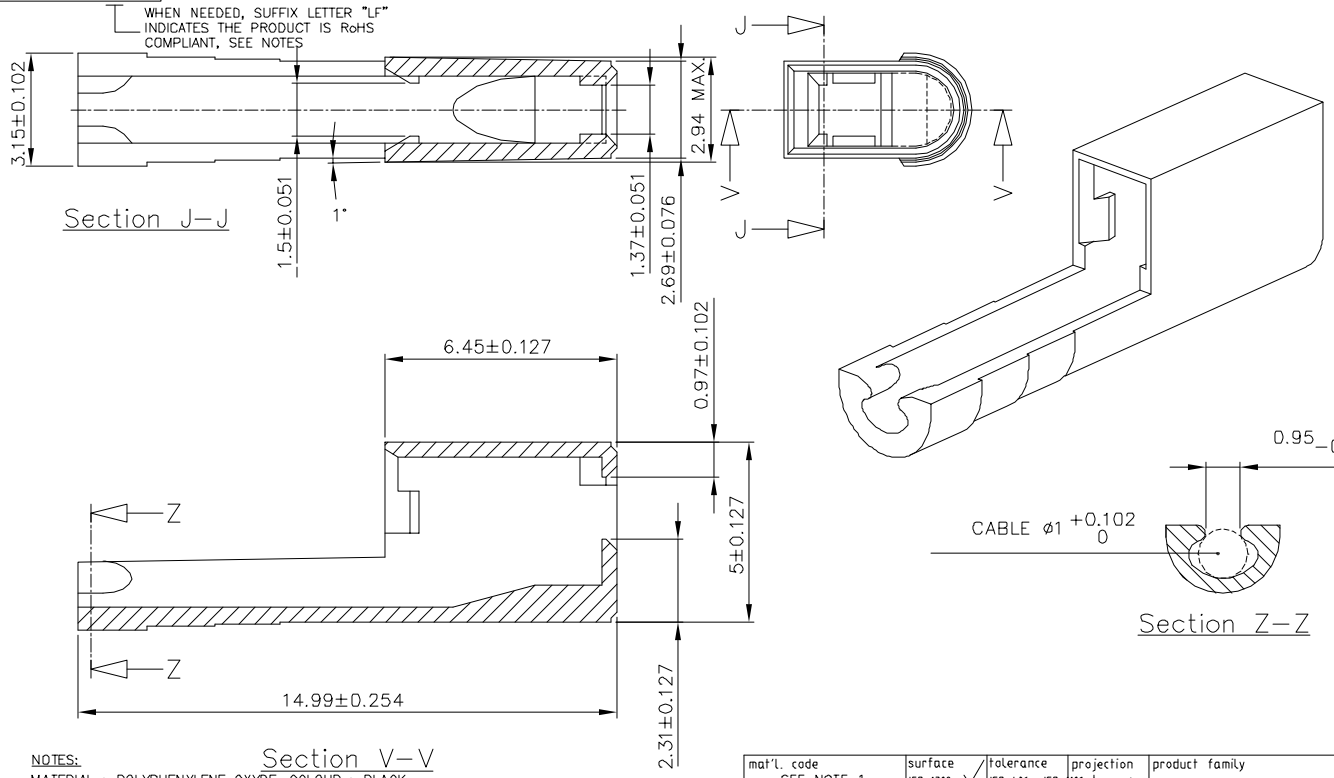

NOTES:
MATERIAL : POLYPHENYLENE OXYDE, COLOUR : BLACK.
RoHS COMPATIBLE PRODUCT SPECIFICATIONS

a – LABELING:
– MEETS PACKAGING SPECS AS PER GS-14-920

b – LEGAL STATEMENT: SEE GS-22-008

THE PRODUCT IS NOT INTENDED TO BE EXPOSED TO A MANUFACTURING SOLDER PROCESS.

Ltr	ecn no	dr	date
E	H30301	JvZ	930420
F	F05-0235	DLE	05.08.24
G	F05-0286	DLE	05.11.07
H	F06-0218	DLE	06.07.11

mat'l. code: SEE NOTE 1.
surface: ISO 1302
tolerance: ISO 486 ISO 101
tolerances unless otherwise specified: angles, linear
projection
mm
scale 10:1
dr J.v.Zelst 930420
engr
chr M.Loman 930420
appd
sheet index
revision sheet
product family
title: JUMBO P.V. HOUSING
dwg no 65076
sheet 2 of –
size A3
type Product Customer Drawing
form: A3

Copyright FCI
FCIconnect.com

PDM: Rev:H STATUS:Released Printed: Jun 06, 2009

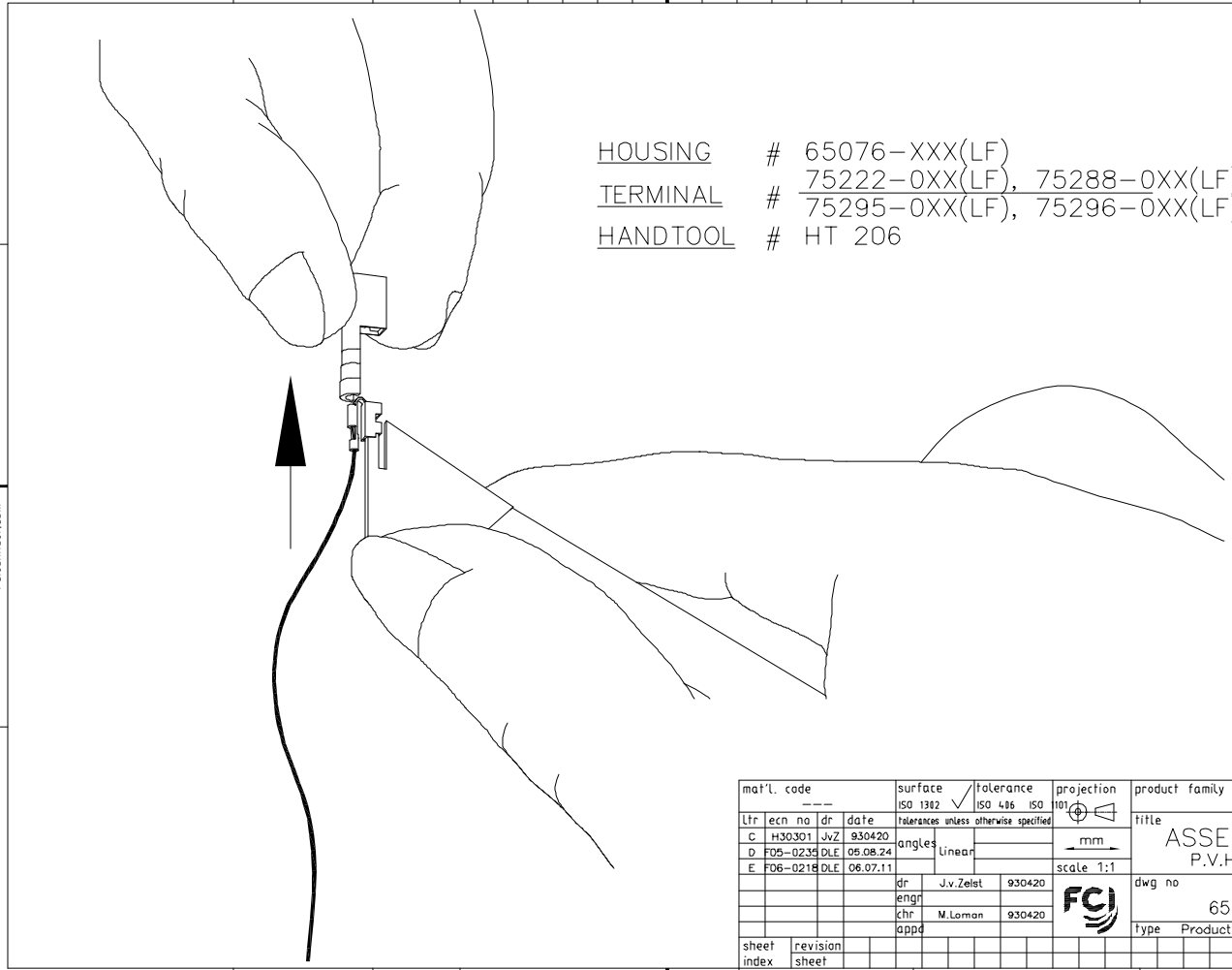

HOUSING # 65076-XXX(LF)
TERMINAL # 75222-0XX(LF), 75288-0XX(LF)
75295-0XX(LF), 75296-0XX(LF)
HANDTOOL # HT 206

mat'l. code				surface	tolerance	projection	product family
---				ISO 1302	ISO 486 ISO 101		
Ltr	ecn no	dr	date	tolerances unless otherwise specified			title
C	H30301	JvZ	930420	angles	linear	mm	ASSEMBLING P.V.HOUSING
D	F05-0235	DLE	05.08.24			scale 1:1	
E	F06-0218	DLE	06.07.11	dr	J.v.Zelst 930420		dwg no 65076 sheet 3 of - size A3
				engr			
				chr	M.Loman 930420		type Product Customer Drawing
				appd			
sheet index	revision sheet						

form: A3

Copyright FCI
FCIconnect.com

PDM: Rev:H STATUS:Released Printed: Jun 06, 2009