Excellent Integrated System Limited

Stocking Distributor

Click to view price, real time Inventory, Delivery & Lifecycle Information:

FCI
72437-107LF

For any questions, you can email us directly:
sales@integrated-circuit.com

Tous droits strictement reservés. Reproduction ou communication a des tiers interdite sans accord écrit. Forme ce part sans autorisation écrite du propriétaire. Propriété de c FCI. Droits de reproduction FCI.

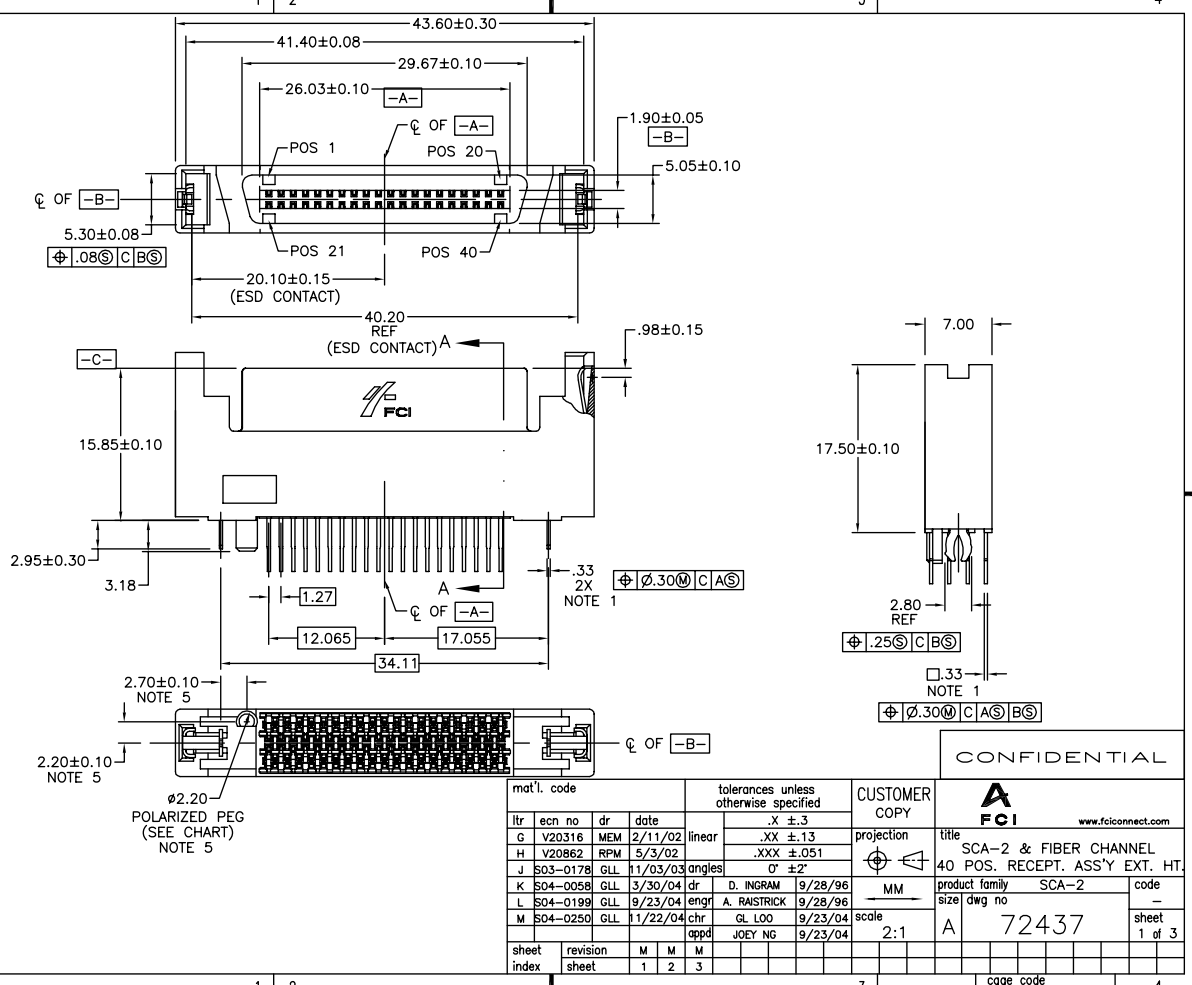

All rights strictly reserved. Reproduction or issue to third parties in any form whatsoever is not permitted without written authority from the proprietor. Property of FCI. Copyright FCI.

PDM: Rev:M STATUS:**Released** Printed: Mar 11, 2011

Tous droits s'strictement reserves. Reproduction ou communiction a des tiers interdite sans consentement ecrit de FCI. Proprieta de c FCI. Droits de reproduction FCI.

All rights strictly reserved. Reproduction or issue to third parties in any form whatsoever is not permitted without written authority from the proprietor. Property of FCI. Copyright FCI.

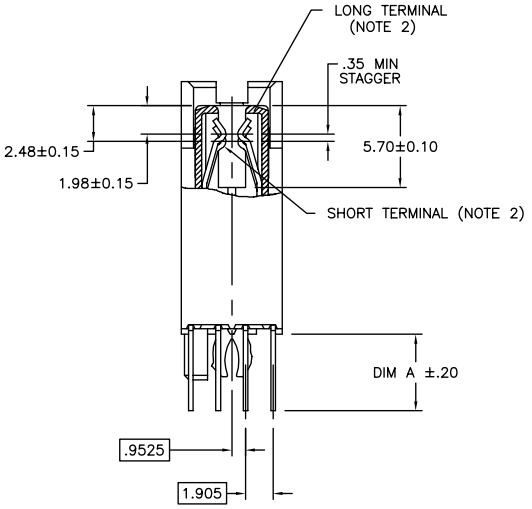

SECTION A–A

CONFIDENTIAL

mat'l. code				tolerances unless otherwise specified			CUSTOMER COPY	FCI www.fciconnect.com
ltr	ecn no	dr	date	linear	.X ±.3		projection	title SCA–2 & FIBER CHANNEL 40 POS. RECEPT. ASS'Y EXT. HT.
M					.XX ±.13			
					.XXX ±.051			
				angles	0° ±2°			
				dr	D. INGRAM	9/28/96	MM	product family SCA–2 / code –
				engr	A. RAISTRICK	9/28/96		
				chr	GL LOO	9/23/04	scale 3:1	size A / dwg no 72437 / sheet 2 of 3
				appd	JOEY NG	9/23/04		
sheet index	revision sheet							

cage code 22526

ACAD

PDM: Rev:M STATUS:**Released** Printed: Mar 11, 2011

PRODUCT NO.	DIM A	POLARIZATION PEG	PLATING	RECOMMEDED P.C. BOARD THICKNESS	PRODUCT NO.	PLATING	PRODUCT NO.	PLATING	PRODUCT NO.	PLATING
72437-001	2.79	YES	NOTE 4	1.57mm (0.062")	72437-101	NOTE 6	72437-001LF	NOTE 9	72437-201LF	NOTE 8
-001S					-101S					
-002	2.79	NO			-102		-002LF		-202LF	
-002S					-102S					
-003	3.18	YES		2.36mm (0.093")	-103		-003LF		-203LF	
-003S					-103S					
-004	3.18	NO			-104		-004LF		-204LF	
-004S					-104S					
-005	4.06	YES		3.18mm (0.125")	-105		72437-005LF		72437-205LF	
-005S					-105S					
-006	4.06	NO			-106		-006LF		-206LF	
-006S					-106S					
-007	4.60	YES			-107		-007LF		-207LF	
72437-007S					72437-107S					

NOTES :

1. TRUE POSITION NOTES APPLY AT TERMINAL TIP.
2. CONTACTS IN POSITIONS 1 THRU 20,24,25,27,28, 30, 31, 33, AND 34 ARE SHORT TERMINALS. CONTACTS IN POSITIONS 21, 22, 23, 26, 29, 32, AND 35 THRU 40 ARE LONG TERMINALS.
3. RAW MATERIALS: HOUSING: HTN, UL94V-0, COLOR: BLACK CONTACTS: PHOSPHOR-BRONZE
4. CONTACT PLATING: 30u" (0.76um) MIN. GXT PLATING OVER 50u" (1.27um) NICKLE MIN. UNDERPLATE IN CONTACT AREA. 100µ" (2,54µm) MIN TIN-LEAD PLATING OVER 50µ" (1,27µm) MIN NICKEL UNDERPLATE IN P.C. BOARD LEG AREA. 50u"(1.27um) MIN. NICKLE UNDERPLATE OVER REMAINING AREA.
5. DIMENSIONS DO NOT APPLY TO CONNECTOR STYLES WITHOUT POLARIZATION PEG. (SEE CHART)
6. CONTACT PLATING: 30µ" (0.76µM). MIN. GOLD PLATING OVER 50µ" (1.27µm) NICKLE MIN. UNDERPLATE IN CONTACT AREA. 100µ" (2,54µm) MIN TIN-LEAD PLATING OVER 50µ" (1,27µm) MIN NICKLE UNDERPLATE IN P.C. BOARD LEG AREA. 50µ" (1.27µm) MIN. NICKLE UNDERPLATE OVER REMAINING AREA.
7. PART NUMBERS WITH AN "S" SUFFIX ARE MANUFACTURED WITH A BRIGHT TIN-LEAD FINISH ON THE TERMINAL TAIL SECTION. PART NUMBERS WITHOUT AN END SUFFIX ARE MANUFACTURED WITH MATTE TIN-LEAD FINISH OR MATTE TIN FINISH.
8. CONTACT PLATING: 30u" (0.76um) GOLD PLATING OVER 50u" (1.27um) NICKLE UNDERPLATE IN CONTACT AREA. 100u" (2,54um) - 100u"(5,08um) TIN PLATING OVER 50u" (1.27um) -100u" (2.54um) NICKEL UNDERPLATE IN P.C. BOARD LEG AREA. 50u" (1.27um) NICKEL UNDERPLATE OVER REMAINING AREA.
9. CONTACT PLATING: 30u" (0.76um) GXT PLATING OVER 50u" (1.27um) NICKLE UNDERPLATE IN CONTACT AREA. 100u" (2,54um) - 200u"(5,08um) TIN PLATING OVER 50u" (1.27um) -100u" (2.54um) NICKEL UNDERPLATE IN P.C. BOARD LEG AREA. 50u" (1.27um) NICKEL UNDERPLATE OVER REMAINING AREA.

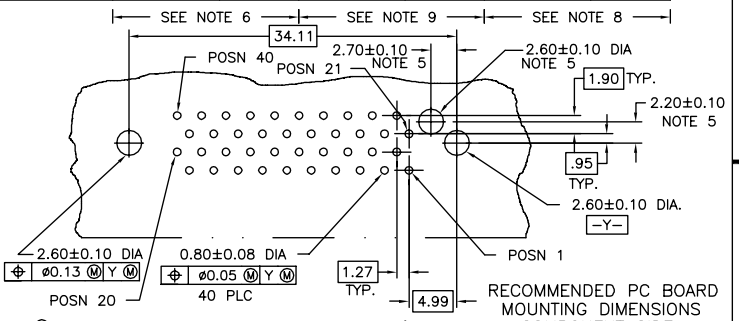

RECOMMENDED PC BOARD MOUNTING DIMENSIONS COMPONENT SIDE

10. THE HOUSING WILL WITHSTAND EXPOSURE TO 260°C PEAK TEMPERATURE FOR 10 SECONDS IN A WAVE SOLDER APPLICATION WITH A 1.57MM MINIMUM THICK CIRCUIT BOARD.
11. THIS PRODUCT MEETS EUROPEAN UNION DIRECTIVES AND OTHER COUNTRY REGULATIONS AS DESCRIBED IN GS-22-008.
12. PART NUMBERS ENDING IN "LF" MEANS FOR NOTE 11 LEAD FREE IDENTIFICATION. P/N XXXXX-2XXLF IS EQUIVALENT TO PREVIOUS P/N XXXXX-2XX

CONFIDENTIAL

mat'l. code				tolerances unless otherwise specified			
ltr	ecn no	dr	date	linear	.X ±.3		
M					.XX ±.13		
					.XXX ±.051		
				angles	0° ±2°		
				dr	D. INGRAM	9/28/96	
				engr	A. RAISTRICK	9/28/96	
				chr	GL LOO	9/23/04	
				appd	JOEY NG	9/23/04	
sheet index	revision sheet						

CUSTOMER COPY
projection
MM
scale 2:1

FCI www.fciconnect.com
title SCA-2 & FIBER CHANNEL 40 POS. RECEPT. ASS'Y EXT. HT.
product family SCA-2
size A
dwg no 72437
code -
sheet 3 of 3
cage code 22526

ACAD

PDM: Rev:M STATUS:Released Printed: Mar 11, 2011

Tous droits strictement reserves. Reproduction ou communication a des tiers interdites sans notre consentement ecrit. Proprietes de c. FCI. Droits de reproduction FCI.
Proprietes de c. FCI.
All rights strictly reserved. Reproduction or issue to third parties in any form whatsoever is not permitted without written authority from the proprietor. Property of FCI. Copyright FCI.