Excellent Integrated System Limited

Stocking Distributor

Click to view price, real time Inventory, Delivery & Lifecycle Information:

Harting
60990000011

For any questions, you can email us directly:
sales@integrated-circuit.com

Alle Rechte vorbehalten/ *All rights reserved*

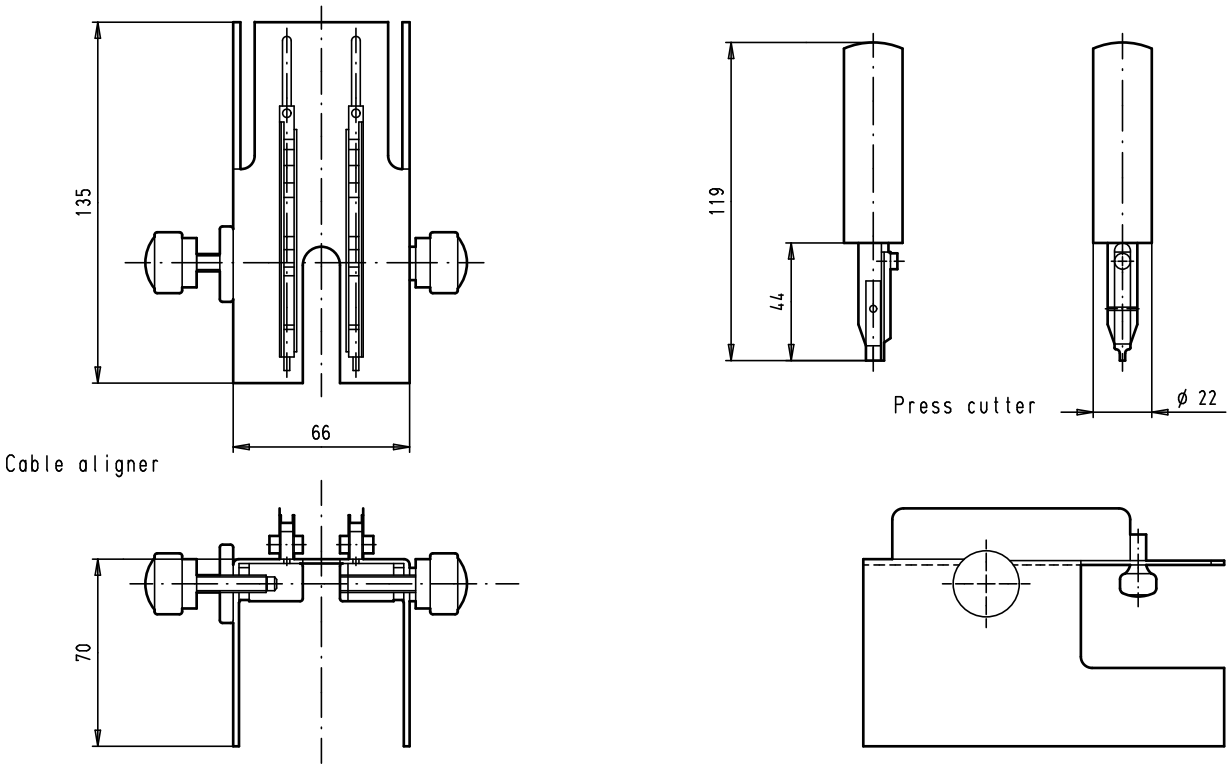

				Dat.	Name			
			Detail.	30/07/07	PK	All Dim. in mm Orig. Size DIN A 4	Har-mik tools: cable aligner and press cutter	Maßstab/ *Scale* 1:2
			Insp.					
			Stand.					
34389	30/07/07	PK	HARTING EURL F-95972 Paris				TB 60 99 000 0011	Blatt/ *Page* 1/1
Mod.	Dat.	Name					Sub.	