Excellent Integrated System Limited

Stocking Distributor

Click to view price, real time Inventory, Delivery & Lifecycle Information:

Harting
09400240631

For any questions, you can email us directly:
sales@integrated-circuit.com

Alle Rechte vorbehalten/ *All rights reserved*

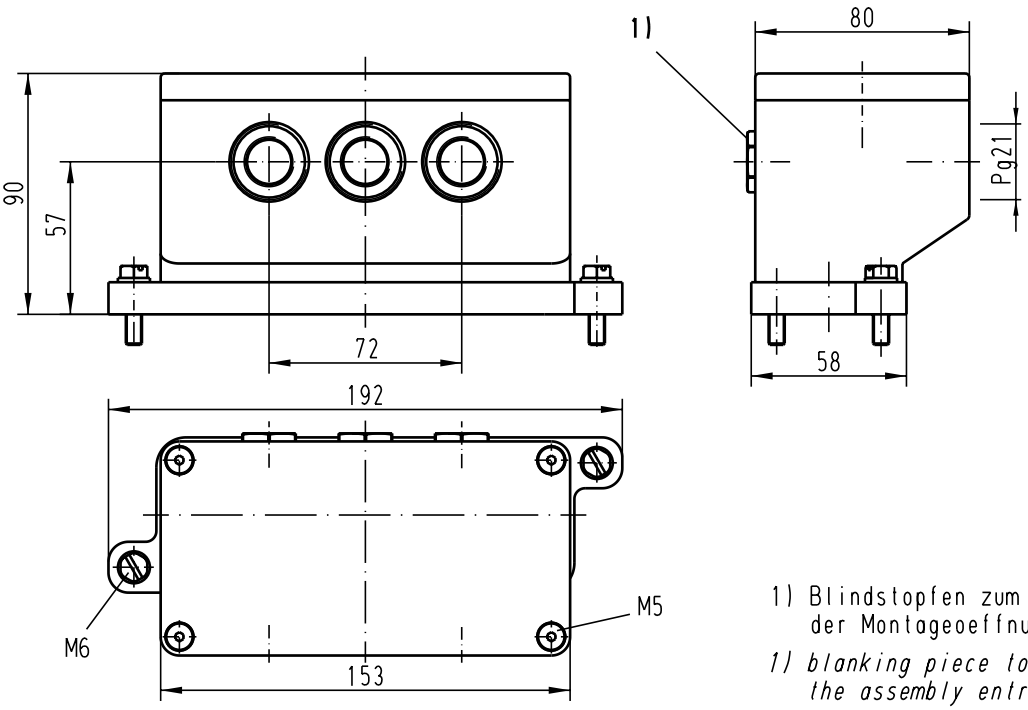

1) Blindstopfen zum Verschluß der Montageoeffnung Pg11

1) blanking piece to close the assembly entry Pg11

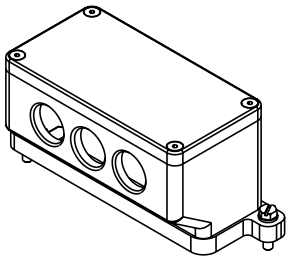

All Dimensions in mm
Original Size DIN A 4

Mod.	Dat.	Name
410470	14.04.03	Ho
26691	22.11.99	Gä
24759	17.08.98	SPER.
20986	28.04.97	KR

Techn. Character.

	Dat.	Name
Detail.	11.10.96	ROH.
Insp.		FER.
Stand.		

Massstab/ *Scale* 1 : 2

HARTING Electric GmbH & Co. KG
D-32339 Espelkamp

Nicht tolerierte Masse/ *free size tolerances*

Han 24HPR-gw6-11/21
Gehäuse, winklig/
hood, angled entry

TB 09 40 024 0631

Sub.

Blatt/ *page*