Excellent Integrated System Limited

Stocking Distributor

Click to view price, real time Inventory, Delivery & Lifecycle Information:

Sullins Connector Solutions
EZC10DRAS

For any questions, you can email us directly:
sales@integrated-circuit.com

SULLINS PART NUMBER EZC10DRAS

SULLINS ELECTRONICS CORP

SAN MARCOS, CA 760-744-0125 FAX 760-744-6081

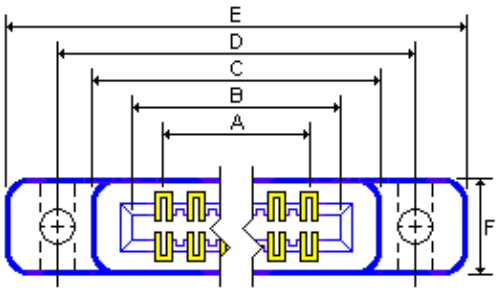

FULL BELLOWS BIFURCATED CONTACTS

E = 1.875+-.020 [47.62+-0.51]
D = 1.575+-.010 [40.01+-0.25]
C = 1.275+-.015 [32.38+-0.38]
B = 1.100+-.008 [27.94+-0.20]
A = 0.900+-.008 [22.86+-0.20]

F = 0.330+-.005 [8.38+-0.13]

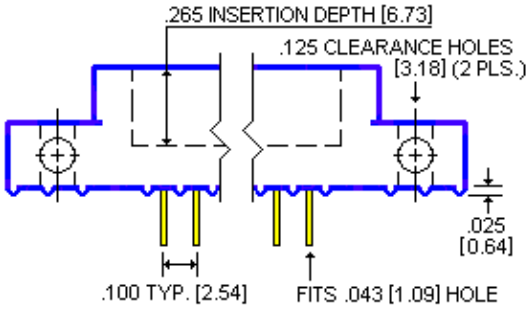

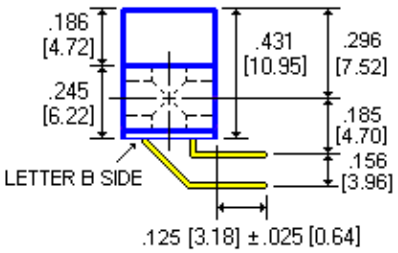

RIGHT ANGLE BENT TAILS NOT SHOWN IN TOP AND BOTTOM VIEWS

TABLE>

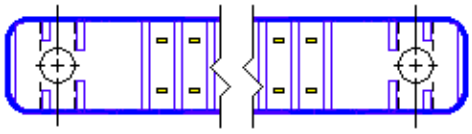

```
bsp MARKING:
bsp 1  2  ...  9  10  B
bsp 1  2  ...  9  10  A
```

1.0 SPECIFICATIONS FOR A DUAL 10/20 POSITION RIGHT ANGLE CONNECTOR
2.0 INSULATION MATERIAL: THERMOPLASTIC POLYESTER
3.0 CONTACT MATERIAL: CA521 PHOSPHOR BRONZE GRADE C
4.0 TEMPERATURE: TO 125 DEGREES C CONTINUOUS
5.0 PLATING: .000010" GOLD ON CONTACT SURFACE, .000100" TIN ON TAILS, .000050" NICKEL UNDERPLATE
6.0 VOLTAGE RATING: 600 VDC MINIMUM AT SEA LEVEL
7.0 UL FLAMMABILITY RATING: 94V-0
8.0 CURRENT RATING: 3 AMPERES
9.0 VOLTAGE DROP: 30 MILLIVOLTS AT RATED CURRENT
10.0 INSULATION RESISTANCE: 5,000 MEGA OHMS
11.0 IDENTIFICATION: PART TO BE MARKED WITH PART NUMBER AND DATE CODE
12.0 BOARD THICKNESS ACCOMMODATED: .054 INCH TO .070 INCH
13.0 INSERTION FORCE: 16 OZ MAX PER CONTACT PAIR USING .062 INCH BLADE
14.0 WITHDRAWAL FORCE: 1 OZ MIN PER CONTACT PAIR USING .054 INCH BLADE
15.0 SPECIFICATIONS SUBJECT TO CHANGE WITHOUT NOTICE
16.0 TOLERANCE: +-.010 INCH UNLESS OTHERWISE NOTED
17.0 NOT DRAWN TO SCALE

SULLINS PART NUMBER: EZC10DRAS **DATE: 3-9-04**

Print PDF