Excellent Integrated System Limited

Stocking Distributor

Click to view price, real time Inventory, Delivery & Lifecycle Information:

Bel Fuse Inc.
VBI211

For any questions, you can email us directly:
sales@integrated-circuit.com

Distributor of Bel Fuse Inc.: Excellent Integrated System Limited
Datasheet of VBI211 - CONN BNC JACK R/A 50 OHM SOLDER
Contact us: sales@integrated-circuit.com Website: www.integrated-circuit.com

RoHS COMPLIANT

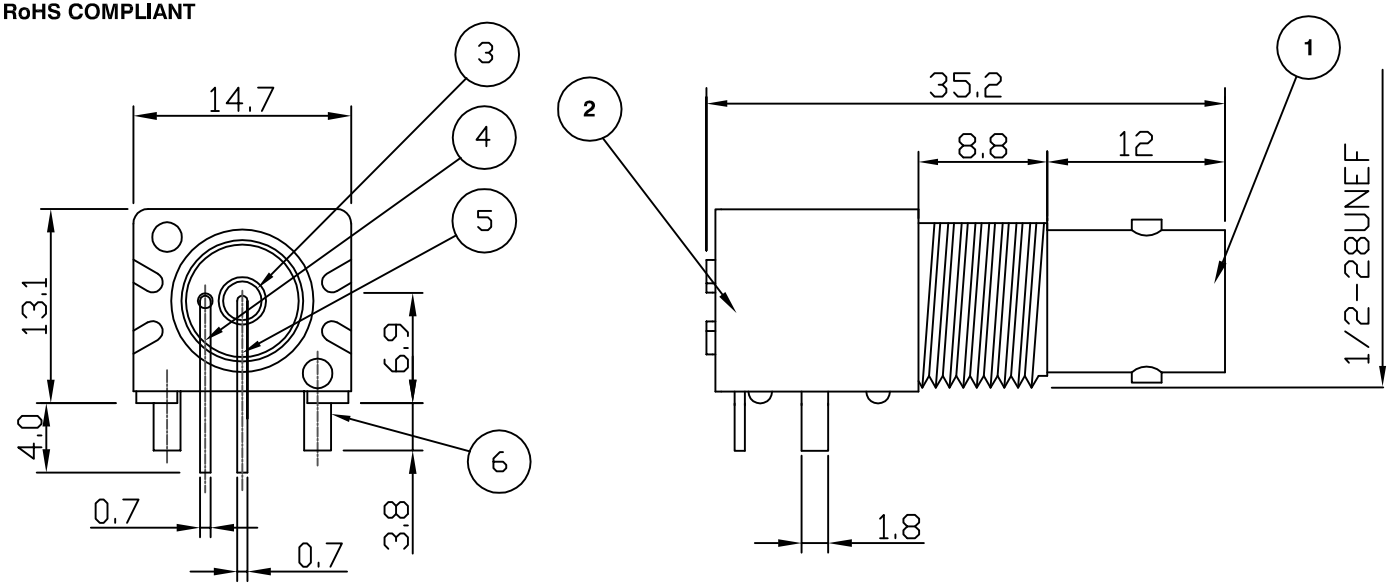

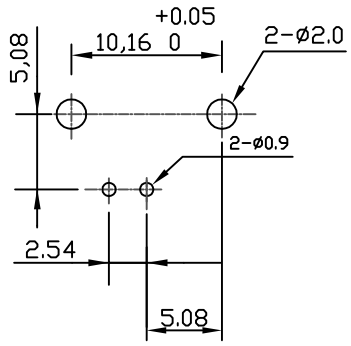

RECOMMENDED PCB LAYOUT

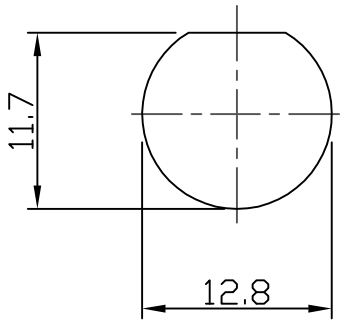

RECOMMENDED PANEL CUTOUT

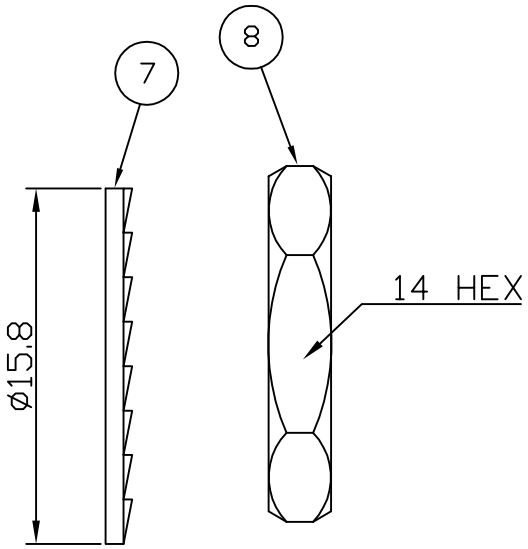

Electrical Characteristics

Nominal Impedance:	50 ohms
Frequency Range:	DC to 4 GHz
VSWR:	2:1 maximum
Operating Voltage (rms):	500 V maximum at sea
Dielectric Withstand Voltage (rms):	1500 V maximum at sea
Center Contact Resistance:	3 milliohms maximum
Outer Contact Resistance:	2 milliohms maximum
Insulation Resistance:	5000 megohms minimu

Mechanical Characteristics

Mating Cycles:	500 cycles minimum

Environmental Characteristics

Temperature Range:	-40 °C to +85 °C

	PART	DESCRIPTION
1	Shell	Zinc Alloy, nickel plated
2	Body	P.B.T. UL94V-0 (White)
3	Dielectric	Polypropylene
4	Ground Terminal	Brass, tin plated
5	Socket Contact	Phosphor Bronze, gold plated
6	Mount Post	Brass, tin plated >5 Microns
7	Lock Washer	Iron, nickel plated
8	Hex Nut	Brass, nickel plated

DESCRIPTION OF REVISION	APPVD	ISS	D
Posts and contact dimension change	JC	11	09 J
ECN 2015-005	JC	10	28 M
Text Change	JC	9	24 J
PCB Mounting Dimensions Corrected	LB	8	21 J
Complete Update	KA	7	13 M
Updated Address	KA	6	22 F
CAD Issue	SN	5	05 F
Added UL Numbers	AT	4	01 J

cinch CONNECTIVITY SOLUTIONS a bel group
11 Bilton Road,
Chelmsford,Essex,
CM1 2UP, UK.
Tel: +44 (0) 1245 359515
Fax: +44 (0) 1245 358938

SCALE: Not To Scale
DIMENSIONS: mm
TOLERANCES: ± 0.2mm unless otherwise stated

DRAWN BY:	S Nash
CHECKED BY:	S Nash
APPROVED BY:	M Nielsen
DATE:	05 Feb 02

TITLE:

BNC R/A PCB Mount Jack (low profile)

PART NUMBER:

VBI211

PAGE: 1 of 1

COPYRIGHT © 2002 VITELEC ELECTRONICS LIMITED

THIS DRAWING MAY NOT BE REPRODUCED IN WHOLE OR IN PART WITHOUT OUR WRITTEN PERM