Excellent Integrated System Limited

Stocking Distributor

Click to view price, real time Inventory, Delivery & Lifecycle Information:

Bel Fuse Inc.
142-1801-606

For any questions, you can email us directly:
sales@integrated-circuit.com

Distributor of Bel Fuse Inc.: Excellent Integrated System Limited
Datasheet of 142-1801-606 - CONN SMA JACK STR 50OHM SOLDER
Contact us: sales@integrated-circuit.com Website: www.integrated-circuit.com

PART NUMBER	ITEM 1 BODY	ITEM 2 CONTACT	ITEM 3 INSULATOR	ITEM 4 COUPLING NUT	ITEM 5 RETENTION SPRING	ITEM 6 EMI GASKET
142-1801-601	BRASS GOLD PL .00001 MIN OVER NICKEL PL .00005 MIN OVER COPPER PL .00005 MIN	BERYLLIUM COPPER GOLD PL .00005 MIN OVER NICKEL PL .00005 MIN OVER COPPER PL .00005 MIN	TEFLON	BRASS GOLD PL .00001 MIN OVER NICKEL PL .00005 MIN OVER COPPER PL .00005 MIN	BERYLLIUM COPPER UNPLATED	CONDUCTIVE SILICONE PER MIL-C-83528, TYPE M
142-1801-606	BRASS NICKEL PL .0001 MIN OVER COPPER PL .00005 MIN	BERYLLIUM COPPER GOLD PL .00005 MIN OVER NICKEL PL .00005 MIN OVER COPPER PL .00005 MIN	TEFLON	BRASS NICKEL PL .0001 MIN OVER COPPER PL .00005 MIN	BERYLLIUM COPPER UNPLATED	CONDUCTIVE SILICONE PER MIL-C-83528, TYPE M

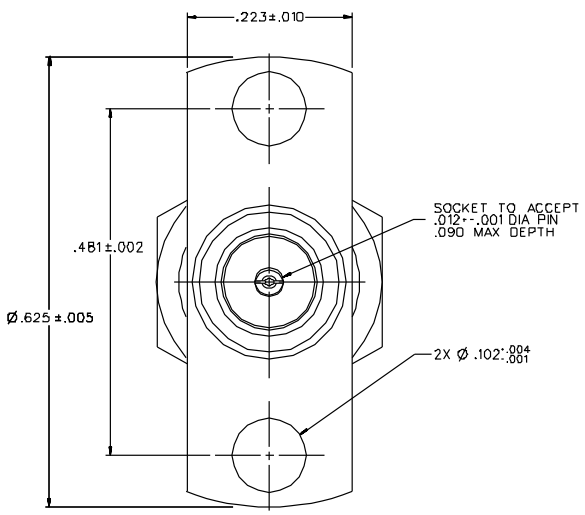

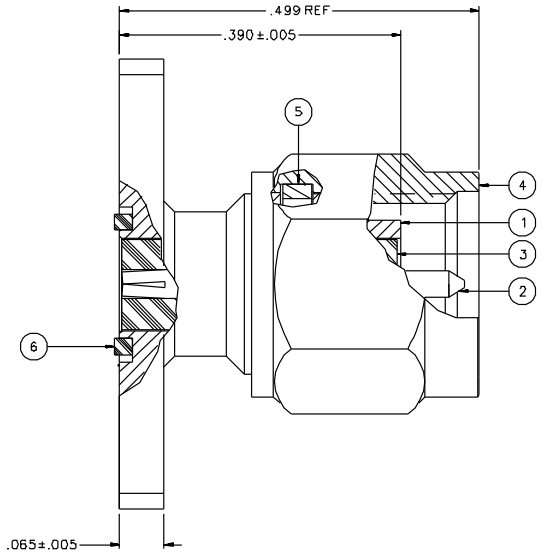

NOTES:

1. SPECIFICATIONS:

IMPEDANCE: 50 OHMS
FREQUENCY RANGE: 0-26.5 GHz
VSWR: DEPENDANT UPON APPLICATION, TYPICALLY < 1.1 + .01F (F IN GHz)
WORKING VOLTAGE: 335 VRMS MAX AT SEA LEVEL
DIELECTRIC WITHSTANDING VOLTAGE: 1000 VRMS MIN AT SEA LEVEL
INSULATION RESISTANCE: 5000 MEGOHM MIN
CONTACT RESISTANCE:
CENTER CONTACT - INITIAL 6.0 MILLIOHM MAX, AFTER ENVIRONMENTAL 8.0 MILLIOHM MAX
OUTER CONDUCTOR - INITIAL 2.0 MILLIOHM MAX AFTER ENVIRONMENTAL NOT APPLICABLE
BRAID TO BODY - NOT APPLICABLE
CORONA LEVEL: 250 VOLTS MIN AT 70,000 FEET
INSERTION LOSS: DEPENDANT UPON APPLICATION, TYPICALLY <$\sqrt{.06F}$ (F IN GHz)
RF LEAKAGE: -90 dB MIN AT 2.5 GHz
RF HIGH POTENTIAL WITHSTANDING VOLTAGE: 670 VRMS MIN AT 4 AND 7 MHz

MECHANICAL:

ENGAGE/DISENGAGE TORQUE: 2 INCH-POUNDS MAX
MATING TORQUE: 7-10 INCH POUNDS
COUPLING PROOF TORQUE: 15 INCH-POUNDS MIN
COUPLING NUT RETENTION: 60 LBS MIN
CONTACT RETENTION: 6 LBS MIN AXIAL FORCE
CABLE ACCEPTABILITY: NOT APPLICABLE
CABLE HEX CRIMP SIZE: NOT APPLICABLE
CABLE RETENTION: NOT APPLICABLE
DURABILITY: 500 CYCLES MIN

ENVIRONMENTAL:

(MEETS OR EXCEEDS THE APPLICABLE PARAGRAPH OF MIL-PRF-39012)
THERMAL SHOCK: MIL-STD-202, METHOD 107, CONDITION B
OPERATING TEMPERATURE: -65 DEG C TO 165 DEG C
CORROSION: MIL-STD-202, METHOD 101, CONDITION B
SHOCK: MIL-STD-202, METHOD 213, CONDITION I
VIBRATION: MIL-STD-202, METHOD 204, CONDITION D
MOISTURE RESISTANCE: MIL-STD-202, METHOD 106

DRAWING NO. C - 142-1801-601/610

0	REVISIONS				
ENGINEERING RELEASE					
1	8-22-95	RJB HK	RJB JRK	RJB JRK	ECN 43660
VERSION UPDATE					
1a	4-18-02	RJB			5-14-02 ECN 48369

* REVISION NUMBER FOLLOWED BY AN ALPHA *
* CHARACTER INDICATES DRAWING CLARIFIC. *
* CATION OR PART NUMBER ADDITION ONLY. *

CUSTOMER DRAWING

THIS DRAWING TO BE INTERPRETED PER ANSI Y 14.5M - 1982

"μSTATION"

COMPANY CONFIDENTIAL

TOLERANCE UNLESS OTHERWISE SPECIFIED		DRAWN BY	DATE
DECIMALS	mm	JRK	5-31-95
.XX		CHECKED BY JRK	DATE 8-23-95
.XXX		APPROVED BY TAK	DATE 8-24-95
MATL		APPROVED BY RJB	DATE 8-25-95
FINISH		RELEASE DATE	8-29-95

JOHNSON® Cinch Connectivity Solutions
Cinch Connectivity Solutions
299 Johnson Ave. Ste. 100
Waseca, MN 56093
1-800-247-8256

TITLE ASSY, PLUG, 2 HOLE FLANGE MOUNT, FLANGE SOCKET .012, FIELD REPLACEABLE SMA

CODE NO. | DRAWING NO. C - 142-1801-601/610

SCALE 10:1 | U/M INCH | SHEET 2 OF 2