Excellent Integrated System Limited

Stocking Distributor

Click to view price, real time Inventory, Delivery & Lifecycle Information:

Molex Connector Corporation
0399910315

For any questions, you can email us directly:
sales@integrated-circuit.com

SD-39990-001

ASSEMBLY MATERIAL NO. (STANDARD)	ASSEMBLY MATERIAL NO. (-G30 OPTION)	NUMBER OF CIRCUITS "XX"	DIM. "A"	DIM. "B"	DIM. "C"
399900302	399910302	02	10.8 [.42]	5.00 [.197]	5.00 [.197]
399900303	399910303	03	15.8 [.62]	10.01 [.394]	10.01 [.394]
399900304	399910304	04	20.8 [.82]	15.01 [.591]	10.01 [.394]
399900305	399910305	05	25.8 [1.02]	20.02 [.788]	10.01 [.394]
399900306	399910306	06	30.8 [1.21]	25.02 [.985]	15.01 [.591]
399900307	399910307	07	35.8 [1.41]	30.02 [1.182]	15.01 [.591]
399900308	399910308	08	40.8 [1.61]	35.03 [1.379]	20.02 [.788]
399900309	399910309	09	45.8 [1.80]	40.03 [1.576]	20.02 [.788]
399900310	399910310	10	50.8 [2.00]	45.03 [1.773]	25.02 [.985]
399900311	399910311	11	55.8 [2.20]	50.04 [1.970]	25.02 [.985]
399900312	399910312	12	60.8 [2.39]	55.04 [2.167]	30.02 [1.182]
399900313	399910313	13	65.8 [2.59]	60.05 [2.364]	30.02 [1.182]
399900314	399910314	14	70.8 [2.79]	65.05 [2.561]	35.03 [1.379]
399900315	399910315	15	75.8 [2.99]	70.05 [2.758]	35.03 [1.379]
399900316	399910316	16	80.8 [3.18]	75.06 [2.955]	40.03 [1.576]
399900317	399910317	17	85.8 [3.38]	80.06 [3.152]	40.03 [1.576]
399900318	399910318	18	90.8 [3.58]	85.06 [3.349]	45.03 [1.773]

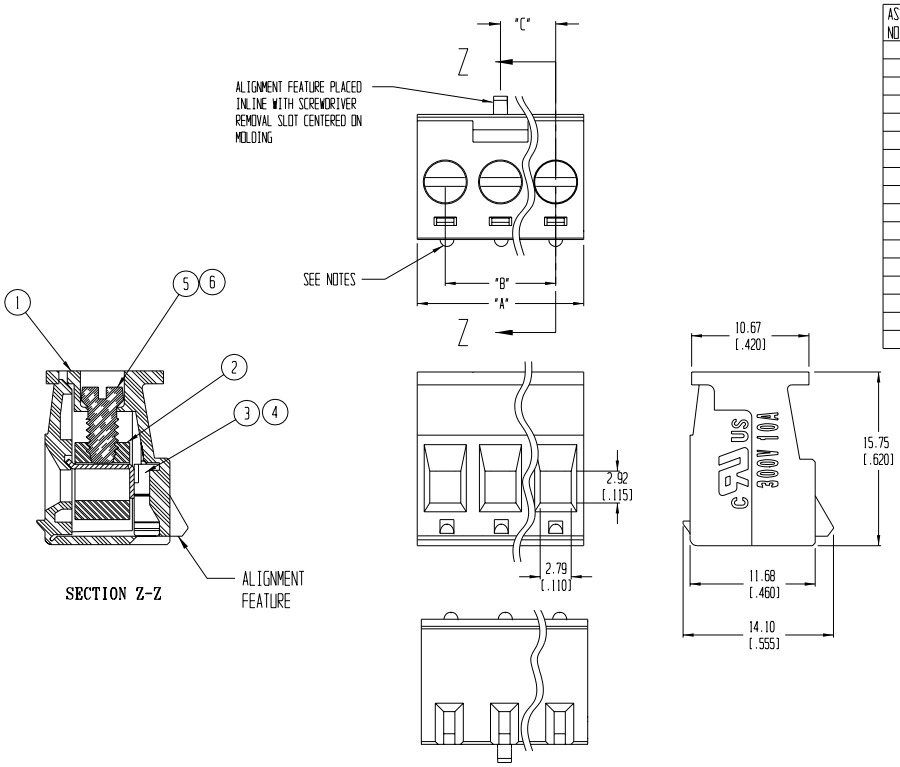

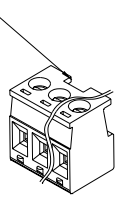

AUXILLARY VIEW
SCALE 1:1

NOTES:

1. MATERIAL: SEE TABLE
2. FINISHES: SEE TABLE
3. PRODUCT SPECIFICATION: NOT REQUIRED
4. PACKAGING: NOT REQUIRED
5. MATES WITH: 99 SERIES HEADER
6. INCH DIMS ARE SHOWN IN BRACKETS [XXX]
7. "XX" REFERS TO THE QTY. OF CIRCUITS
8. SNAP FEATURES
   2 CIRCUIT: 2 SNAPS
   3-24 CIRCUIT: 3 SNAPS
   LOCATED ON ENDS AND ALIGNED WITH SCREWDRIVER REMOVAL SLOT

ITEM	QTY.	DESCRIPTION	MATERIAL	FINISH
6	XX	SCREW, M3 X 0.5 X 5.08 (-G30 OPTION)	PHOSPHOR BRONZE	TIN PLATE
5	XX	SCREW, M3 X 0.5 X 5.08 (STANDARD)	STEEL	ZINC CHROMATE
4	XX	TERMINAL (-G30 OPTION)	PHOSPHOR BRONZE	GOLD PLATE
3	XX	TERMINAL (STANDARD)	PHOSPHOR BRONZE	TIN PLATE
2	XX	PRESSURE CLAMP	BRASS	NICKEL PLATE
1	1	MOLDING	POLYAMIDE	BLACK

EC NO. RELEASED
DRWN: CLY
CH'K:
APPR:
DESCRIPTION
REV A

QUALITY SYMBOLS
MAJOR
CRITICAL
SPC

GENERAL TOLERANCES: (UNLESS SPECIFIED)

	mm	INCH
4 PLACES		±.0015
3 PLACES	±.038	±.005
2 PLACES	±.13	±.01
1 PLACE	±.3	
ANGULAR:	±2°	

DRAFT WHERE APPLICABLE MUST REMAIN WITHIN DIMENSIONS

SCALE 3:1
DESIGN UNITS ☐ mm ☒ INCH
THIRD ANGLE PROJECTION

PROJECT NO. -
DIMENSIONS: ☒ mm INCH ☐ INCH mm ☐ mm ONLY
SHT -
REV -
REVISE ON CAD ONLY

DRAWN BY & DATE C. YORK 08-12-03
CHECKED BY & DATE
APPROVED BY & DATE
CAD FILENAME 9909XX01

TITLE: SINGLE ROW EUROSTYLE PLUG ASSEMBLY 5.00mm [.197]

MOLEX INCORPORATED

MATERIAL NO. SEE CHART
DRAWING NO. SD-39990-001
SHEET NO. 1 OF 1
SIZE B

THIS DRAWING CONTAINS INFORMATION THAT IS PROPRIETARY TO MOLEX INCORPORATED AND SHOULD NOT BE USED WITHOUT WRITTEN PERMISSION.