Excellent Integrated System Limited

Stocking Distributor

Click to view price, real time Inventory, Delivery & Lifecycle Information:

Microwave Technology Inc.
MWT-173

For any questions, you can email us directly:
sales@integrated-circuit.com

MwT-1

12 GHz High Gain GaAs FET

DOWNLOAD ADDITIONAL DATA WWW.MWTINC.COM

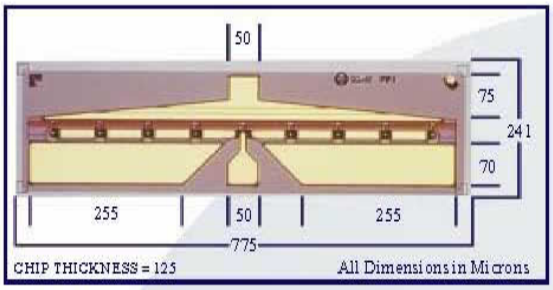

FEATURES

- 10 dB GAIN AT 12 GHz
- EXCELLENT FOR FEEDBACK AMPLIFIER APPLICATIONS 100 MHz TO 12 GHz
- 0.3 MICRON REFRACTORY METAL/GOLD GATE
- 630 MICRON GATE WIDTH
- CHOICE OF CHIP AND THREE PACKAGE TYPES

DESCRIPTION

The MwT-1 is a GaAs MESFET device whose nominal quarter-micron gate length and 630 micron gate width make it ideally suited to applications requiring high-gain in the 100 MHz to 12 GHz frequency range. The straight geometry of the MwT-1 makes it equally effective for either wideband (e.g. 2 to 6 GHz) or narrow-band applications. The chip is produced using MwT's reliable metal system and devices from each wafer are screened to insure reliability. All chips are passivated using MwT's patented "Diamond-Like Carbon" process for increased durability, Designers can use MwT's unique BIN selection feature to choose devices from narrow Idss ranges, insuring consistent circuit operation.

DC SPECIFICATIONS AT Ta = 25°C

SYMBOL	PARAM. & CONDITIONS	UNITS	MIN	TYP	MAX
IDSS	Saturated Drain Current Vds= 4.0 V VGS= 0.0 V	mA	60		240
Gm	Transconductance Vds= 4.0 V VGS= 0.0 V	mS	90	120	
Vp	Pinch-off Voltage Vds= 3.0 V IDS= 4.0 mA	V		-2.0	-5.0
BVGSO	Gate-to-Source Breakdown Volt. Igs= -1.0 mA	V	-5.0	-10.0	
BVGDO	Gate-to-Drain Breakdown Volt. Igd= -1.0 mA	V	-6.0	-10.0	
Rth	Thermal Resistance MwT-1 Chip, 171 MwT-170, 173	°C/W			80 180*

*Overall Rth depends on case mounting.

RF SPECIFICATIONS AT Ta = 25°C

SYMBOL	PARAMETERS AND CONDITIONS	FREQ	UNITS	MIN	TYP
P1dB	Output Power at 1 dB Compression VDS= 5.0 V IDS= 0.6 x IDSS	12 GHz	dBm	23.0	24.0
SSG	Small Signal Gain VDS= 5.0 V IDS= 0.6 x IDSS	12 GHz	dB	9.0	10.0
NFopt	Optimum Noise Figure VDS= 3.0 V IDS= 30 mA	12 GHz	dB		2.0
GA	Gain@Opt. NF VDS= 3.0V IDS= 30 mA	12 GHz	dB		7.0
IDSS	Recommended IDSS Range for Optimum P1dB		mA		120-210

DEVICE EQUIVALENT CIRCUIT MODEL

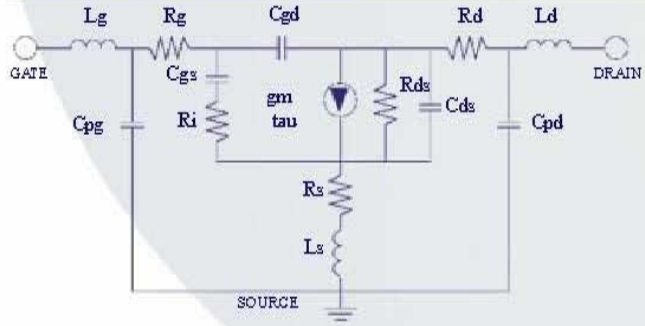

PARAMETER		VALUE	
Source Resistance	Rs	1.88	Ω
Source Inductance	Ls	0.04	nH
Drain-Source Resistance	Rds	90	Ω
Drain-Source Capacitance	Cds	0.001	pF
Drain Resistance	Rd	2.9	Ω
Drain Pad Capacitance	Cpd	0.145	pF
Drain Inductance	Ld	0.32	nH
Gate Bond Wire Inductance	Lg	0.2	nH
Gate Pad Capacitance	Cpg	0.09	pF
Gate Resistance	Rg	0.83	Ω
Gate-Source Capacitance	Cgs	0.64	pF
Channel Resistance	Ri	4.11	Ω
Gate-Drain Capacitance	Cgd	0.06	pF
Transconductance	gm	130.0	mS
Transit Time	tau	2.0	psec

ORDERING INFORMATION

Chip	MwT-1
Package 70	MwT-170
Package 71	MwT-171
Package 73	MwT-173

NOTE:
For Package information, please see supplimentary application note from our website at www.mwtinc.com. When placing order or inquiring, please specify BIN range, wafer no., if known, and screening level required.

4268 Solar Way, Fremont, CA 94538 | Email sales@mwtinc.com | Phone (510) 651-6700 | Fax (510) 952-4000

All rights reserved. MicroWave Technology, Inc. All specifications subject to change without notice.

MwT-1
12 GHz High Gain GaAs FET

MwT-1
DUAL BIAS

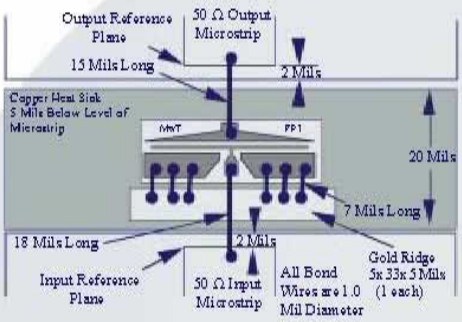

MwT-1
OPTIONAL BONDING

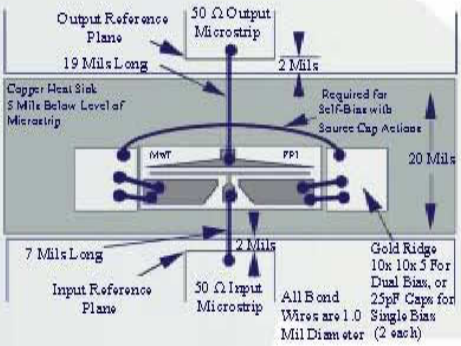

SAFE OPERATING LIMITS vs. BACKSIDE CHIP

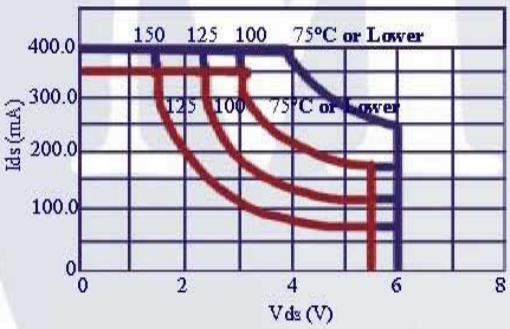

MAXIMUM RATINGS AT Ta = 25°C

SYMBOL	PARAMETER	UNITS	CONT MAX[1]	ABSOLUTE MAX[2]
VDS	Drain to Source Voltage	V	See Safe Operating Limits	
Tch	Channel Temperature	°C	+150	+175
Tst	Storage Temperature	°C	-65 to +150	+175
Pin	RF Input Power	mW	200	300

NOTES: 1. Exceeding any one of these limits in continuous operation may reduce the mean-time-to-failure below the design goals.
2. Exceeding any one of these limits may cause permanent damage.

TYPICAL NOISE PARAMETERS
MwT-1LN Chip: VDS= 3.0V IDS= 30mA

FREQUENCY GHz	NF MIN dB	GAMMA OPT MAG	GAMMA OPT ANGLE	Rn/50
1.00	0.45	0.885	32	1.27
2.00	0.65	0.722	61	0.5
4.00	0.95	0.591	110	0.24
6.00	1.25	0.61	139	0.17
8.00	1.52	0.656	157	0.14
12.00	1.88	0.733	176	0.11

NOISE FIGURE AND ASSOCIATED GAIN VS. FREQUENCY

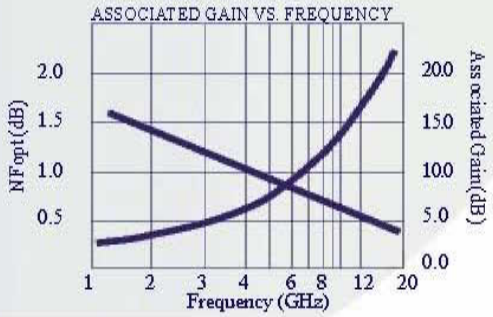

MwT-1	Bin	A	B	C	D
	Idss Range	60-90	90-120	120-180	180-210

BIN ACCURACY STATEMENT

When placing order or inquiring, please specify BIN range, wafer no., if known, and screening level required.

4268 Solar Way, Fremont, CA 94538 | Email sales@mwtinc.com | Phone (510) 651-6700 | Fax (510) 952-4000

All rights reserved. MicroWave Technology, Inc. All specifications subject to change without notice.