FAIRCHILD

LIMITED DATASHEET

Email Analog.Switch@fairchildsemi.com to request the full datasheet.

May 2014

FSA9485 — USB Port Multimedia Switch Featuring Automatic Switching and Accessory Detection

Features

- Detection:
  - Headsets with MIC and Remote
  - USB Data Cable
  - UART Serial Link
  - USB Chargers (Car, CDP, DCP)
  - Factory-Mode Cables
  - Teletype (TTY) Converter
  - USB OTG
  - CEA-936-A Car Kit
  - Video
- Audio, USB, UART, Video, Charging
- Full-Speed and High-Speed 2.0 Compliant
- Automatic Switching with Available Interrupt
- Integrated FET, Charger Detect, OCP (1.5 A), OVT (28 V), 7 V OVP
- Left, Right, MIC (Negative Swing)
- UART: RxD & TxD
- Video: Composite
- V_{BAT}: 3 to 4.4 V
- Programmability: I^2C
- 15 kV IEC 61000-4-2 Air Gap

Description

The FSA9485 is a high-performance multimedia switch featuring automatic switching and accessory detection for the USB port. The FSA9485 allows the sharing of a common USB port to pass audio, video, USB data / charging / On-The-Go (OTG), as well as factory programmability.

In addition, the FSA9485 integrates detection for accessories such as headphones, headsets (MIC / Button), CEA-936-A Car Kit, USB chargers, and UART data cables to use a common USB connector. The FSA9485 can be programmed for manual switching or automatic switching of data paths based on the accessory detected.

With integrated 28 V over-voltage protection and 1.5 A over-current protected FET, the FSA9485 integrates common USB protection devices for V_{BUS}.

Applications

- Mobile Phones & Portable Media Players

Additional Information

- *For additional performance information, please contact analogswitch@fairchildsemi.com.*

Ordering Information

Part Number	Operating Temperature Range	Top Mark	Package
FSA9485UCX (1)	-40 to +85°C	N6	25-Lead, 2.1 x 2.1 x 0.625 mm WLCSP Package

Note:
1. Includes backside lamination.

© 2010 Fairchild Semiconductor Corporation

Block Diagram

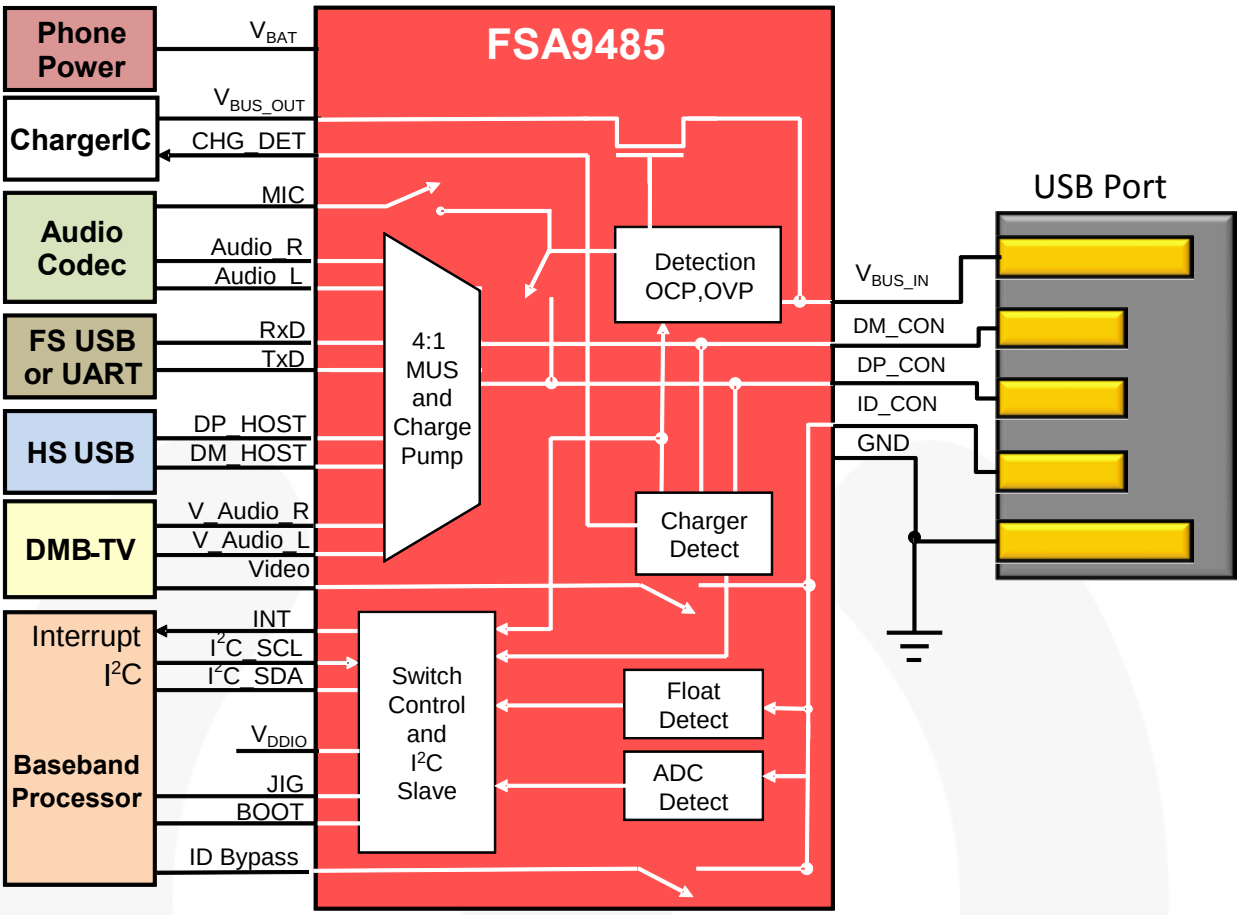

Figure 2. Block Diagram

Pin Configuration

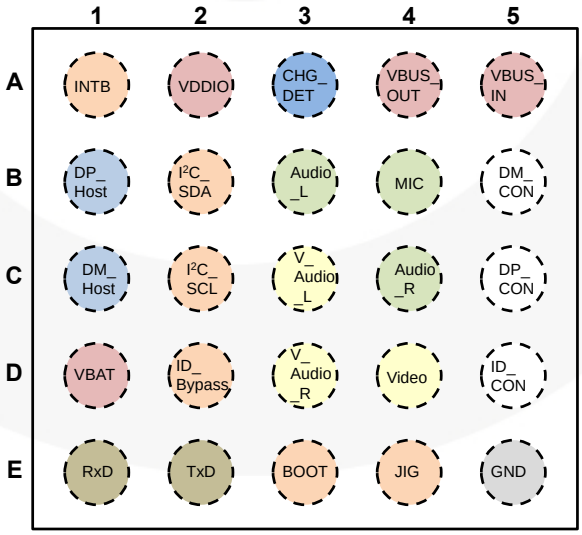

Figure 3. Pin Configuration (Top-Through View)

Physical Dimensions

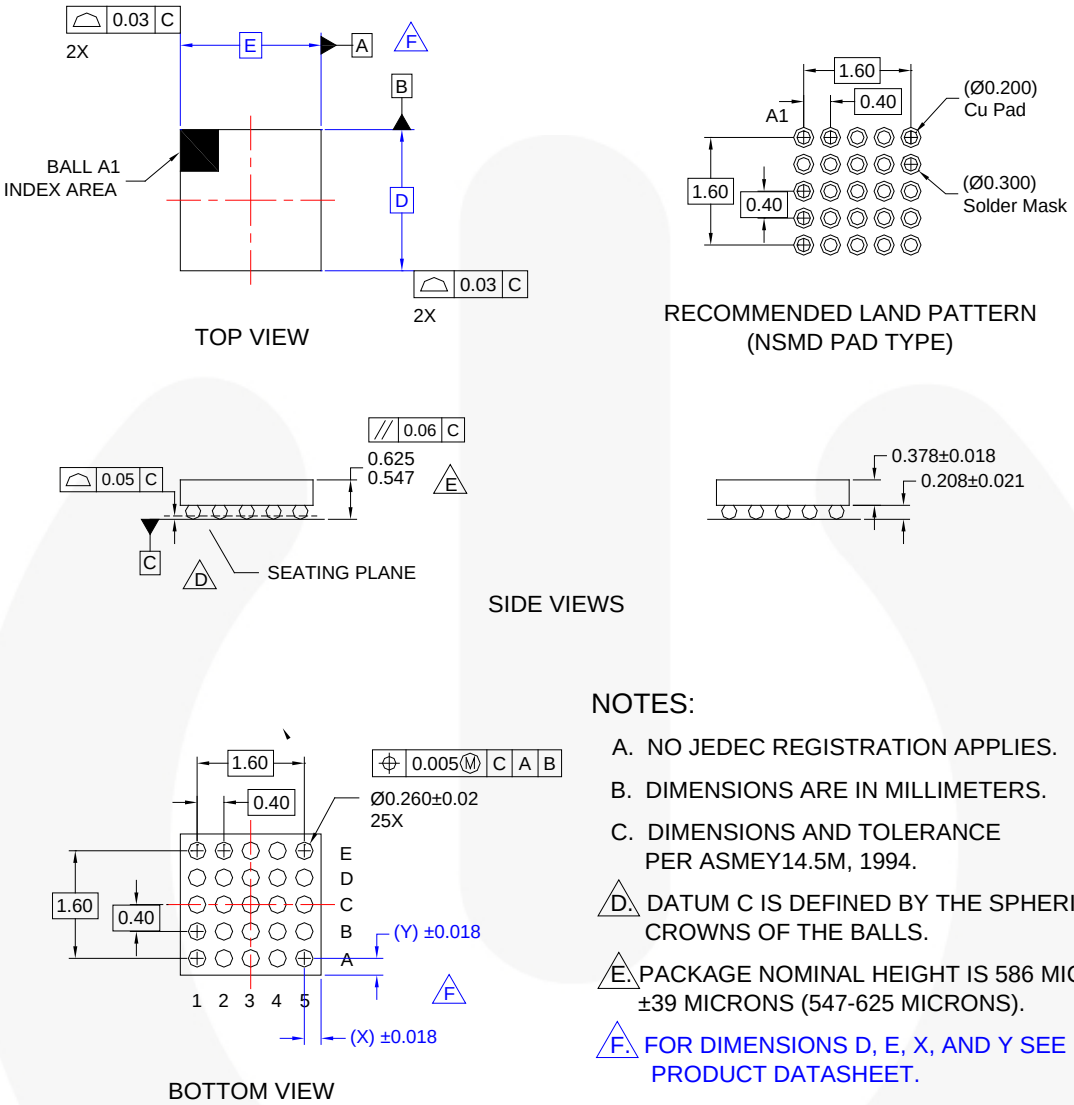

NOTES:

A. NO JEDEC REGISTRATION APPLIES.

B. DIMENSIONS ARE IN MILLIMETERS.

C. DIMENSIONS AND TOLERANCE PER ASMEY14.5M, 1994.

D. DATUM C IS DEFINED BY THE SPHERICAL CROWNS OF THE BALLS.

E. PACKAGE NOMINAL HEIGHT IS 586 MICRONS ±39 MICRONS (547-625 MICRONS).

F. FOR DIMENSIONS D, E, X, AND Y SEE PRODUCT DATASHEET.

G. DRAWING FILNAME: MKT-UC025AArev2.

Figure 25. 25-Lead, Wafer-Level Chip-Scale Package (WLCSP)

Product-Specific Dimensions

Product	D	E	X	Y
FSA9485UCX	2.10	2.10	0.25	0.25

Package drawings are provided as a service to customers considering Fairchild components. Drawings may change in any manner without notice. Please note the revision and/or date on the drawing and contact a Fairchild Semiconductor representative to verify or obtain the most recent revision. Package specifications do not expand the terms of Fairchild's worldwide terms and conditions, specifically the warranty therein, which covers Fairchild products.

Always visit Fairchild Semiconductor's online packaging area for the most recent package drawings: http://www.fairchildsemi.com/packaging/.

For current packing container specifications, visit Fairchild Semiconductor's online packaging area: http://fsce132/packing_dwg/PKG-UC025AA.pdf.

FAIRCHILD

TRADEMARKS

The following includes registered and unregistered trademarks and service marks, owned by Fairchild Semiconductor and/or its global subsidiaries, and is not intended to be an exhaustive list of all such trademarks.

AccuPower™
AX-CAP®*
BitSiC™
Build it Now™
CorePLUS™
CorePOWER™
CROSSVOLT™
CTL™
Current Transfer Logic™
DEUXPEED®
Dual Cool™
EcoSPARK®
EfficientMax™
ESBC™
Fairchild®
Fairchild Semiconductor®
FACT Quiet Series™
FACT®
FAST®
FastvCore™
FETBench™
FPS™
F-PFS™
FRFET®
Global Power Resource℠
GreenBridge™
Green FPS™
Green FPS™ e-Series™
Gmax™
GTO™
IntelliMAX™
ISOPLANAR™
Making Small Speakers Sound Louder and Better™
MegaBuck™
MICROCOUPLER™
MicroFET™
MicroPak™
MicroPak2™
MillerDrive™
MotionMax™
mWSaver®
OptoHiT™
OPTOLOGIC®
OPTOPLANAR®
PowerTrench®
PowerXS™
Programmable Active Droop™
QFET®
QS™
Quiet Series™
RapidConfigure™
Saving our world, 1mW/W/kW at a time™
SignalWise™
SmartMax™
SMART START™
Solutions for Your Success™
SPM®
STEALTH™
SuperFET®
SuperSOT™-3
SuperSOT™-6
SuperSOT™-8
SupreMOS®
SyncFET™
Sync-Lock™
SYSTEM GENERAL®*
TinyBoost®
TinyBuck®
TinyCalc™
TinyLogic®
TINYOPTO™
TinyPower™
TinyPWM™
TinyWire™
TranSiC™
TriFault Detect™
TRUECURRENT®*
µSerDes™
µSerDes™
UHC®
Ultra FRFET™
UniFET™
VCX™
VisualMax™
VoltagePlus™
XS™
仙童™

* Trademarks of System General Corporation, used under license by Fairchild Semiconductor.

DISCLAIMER

FAIRCHILD SEMICONDUCTOR RESERVES THE RIGHT TO MAKE CHANGES WITHOUT FURTHER NOTICE TO ANY PRODUCTS HEREIN TO IMPROVE RELIABILITY, FUNCTION, OR DESIGN. FAIRCHILD DOES NOT ASSUME ANY LIABILITY ARISING OUT OF THE APPLICATION OR USE OF ANY PRODUCT OR CIRCUIT DESCRIBED HEREIN; NEITHER DOES IT CONVEY ANY LICENSE UNDER ITS PATENT RIGHTS, NOR THE RIGHTS OF OTHERS. THESE SPECIFICATIONS DO NOT EXPAND THE TERMS OF FAIRCHILD'S WORLDWIDE TERMS AND CONDITIONS, SPECIFICALLY THE WARRANTY THEREIN, WHICH COVERS THESE PRODUCTS.

LIFE SUPPORT POLICY

FAIRCHILD'S PRODUCTS ARE NOT AUTHORIZED FOR USE AS CRITICAL COMPONENTS IN LIFE SUPPORT DEVICES OR SYSTEMS WITHOUT THE EXPRESS WRITTEN APPROVAL OF FAIRCHILD SEMICONDUCTOR CORPORATION.

As used herein:

1. Life support devices or systems are devices or systems which, (a) are intended for surgical implant into the body or (b) support or sustain life, and (c) whose failure to perform when properly used in accordance with instructions for use provided in the labeling, can be reasonably expected to result in a significant injury of the user.
2. A critical component in any component of a life support, device, or system whose failure to perform can be reasonably expected to cause the failure of the life support device or system, or to affect its safety or effectiveness.

ANTI-COUNTERFEITING POLICY

Fairchild Semiconductor Corporation's Anti-Counterfeiting Policy. Fairchild's Anti-Counterfeiting Policy is also stated on our external website, www.fairchildsemi.com, under Sales Support.

Counterfeiting of semiconductor parts is a growing problem in the industry. All manufacturers of semiconductor products are experiencing counterfeiting of their parts. Customers who inadvertently purchase counterfeit parts experience many problems such as loss of brand reputation, substandard performance, failed applications, and increased cost of production and manufacturing delays. Fairchild is taking strong measures to protect ourselves and our customers from the proliferation of counterfeit parts. Fairchild strongly encourages customers to purchase Fairchild parts either directly from Fairchild or from Authorized Fairchild Distributors who are listed by country on our web page cited above. Products customers buy either from Fairchild directly or from Authorized Fairchild Distributors are genuine parts, have full traceability, meet Fairchild's quality standards for handling and storage and provide access to Fairchild's full range of up-to-date technical and product information. Fairchild and our Authorized Distributors will stand behind all warranties and will appropriately address any warranty issues that may arise. Fairchild will not provide any warranty coverage or other assistance for parts bought from Unauthorized Sources. Fairchild is committed to combat this global problem and encourage our customers to do their part in stopping this practice by buying direct or from authorized distributors.

PRODUCT STATUS DEFINITIONS

Definition of Terms

Datasheet Identification	Product Status	Definition
Advance Information	Formative / In Design	Datasheet contains the design specifications for product development. Specifications may change in any manner without notice.
Preliminary	First Production	Datasheet contains preliminary data; supplementary data will be published at a later date. Fairchild Semiconductor reserves the right to make changes at any time without notice to improve design.
No Identification Needed	Full Production	Datasheet contains final specifications. Fairchild Semiconductor reserves the right to make changes at any time without notice to improve the design.
Obsolete	Not In Production	Datasheet contains specifications on a product that is discontinued by Fairchild Semiconductor. The datasheet is for reference information only.

Rev. I68